Multi-Channel Temperature Controller (ver. 2)
By
Dr. Jeffrey W. Hudgens

Institute for Bioscience and Biotechnology Research (CARB II/2204B)
BioProcess Measurements Group (Div. 645.07), Biomolecular Measurement Division
National Institute of Standards and Technology
9600 Gudelsky Drive, Rockville, MD 20850
Tel. 240-314-6485 (Off.)
Website: https://www.nist.gov/people/jeffrey-w-hudgens

Dr. Jeffrey W. Hudgens, hudgens@nist.gov, 240-314-6485

Table of Contents

Front Panel of HDX-MS Temperature Controller 3
Interior View of HDX-MS Temperature Controller (Front) 4
InteriorView of HDX-MS Temperature Controller (Side) 5
Back View of HDX-MS Temperature Controller 6
Parts and Tools needed to Assemble T-Controller 7
T-control Front Panel 10
Chassis Bottom Plate 12
System Power Schematic (110VAC) 13
STL File Inventory (Optional) 14
SSR-RACK08 eight-channel solid-state Relay Board 15
F4T to RTD Module Connections 17
Connections of Optical Interpreter Board 18
Detail of Electrical Connections on RACK08 (Front Indicatior LEDs) 19
Wiring the CN32PT-440 Controller Units 20
Optical Isolator Interface Circuit 21
View of Optical Isolator Interpreter Board 22
Diagram of the Electrical Cable Assignments 23
Zone View of Interface to T-Control 37-PIN DIN Connector 24
HDX-Box Internal Wiring Harness Connections 24
Electrical Connections within the 6-Channel T-controller 26
Watlow F4T Module Schematics 29
Heater/Sensor Wiring Harnesses 32
Diagram for 8-pin Connector and Cable at T-control Chassis 34
Configuration of Watlow F4T as Shown in COMPOSER Software 35

Front Panel of HDX-MS Temperature Controller

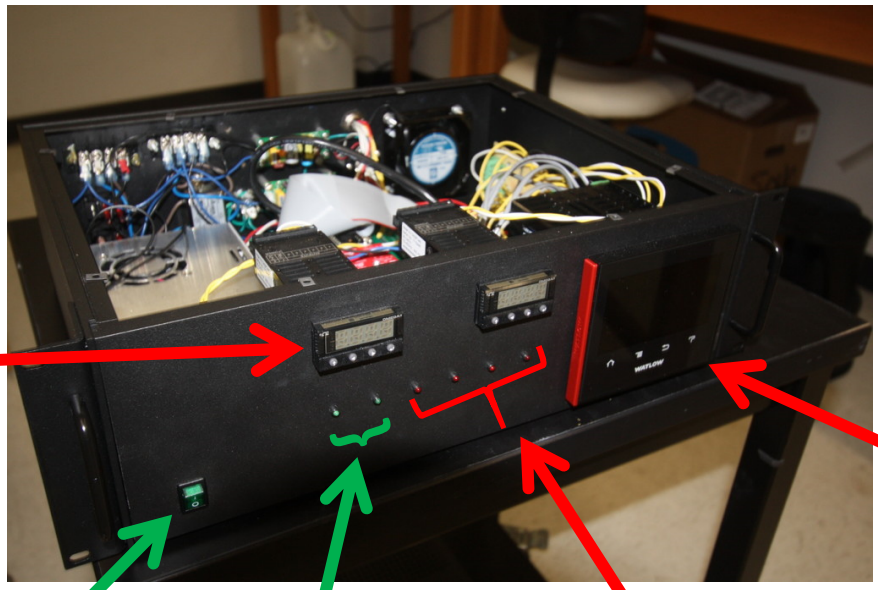

Dr. Jeffrey W. Hudgens, Hudgens@nist.gov, 240-314-6485
Dr. Jeffrey W. Hudgens, hudgens@nist.gov, 240-314-6485

Interior View of HDX-MS Temperature Controller (Front)

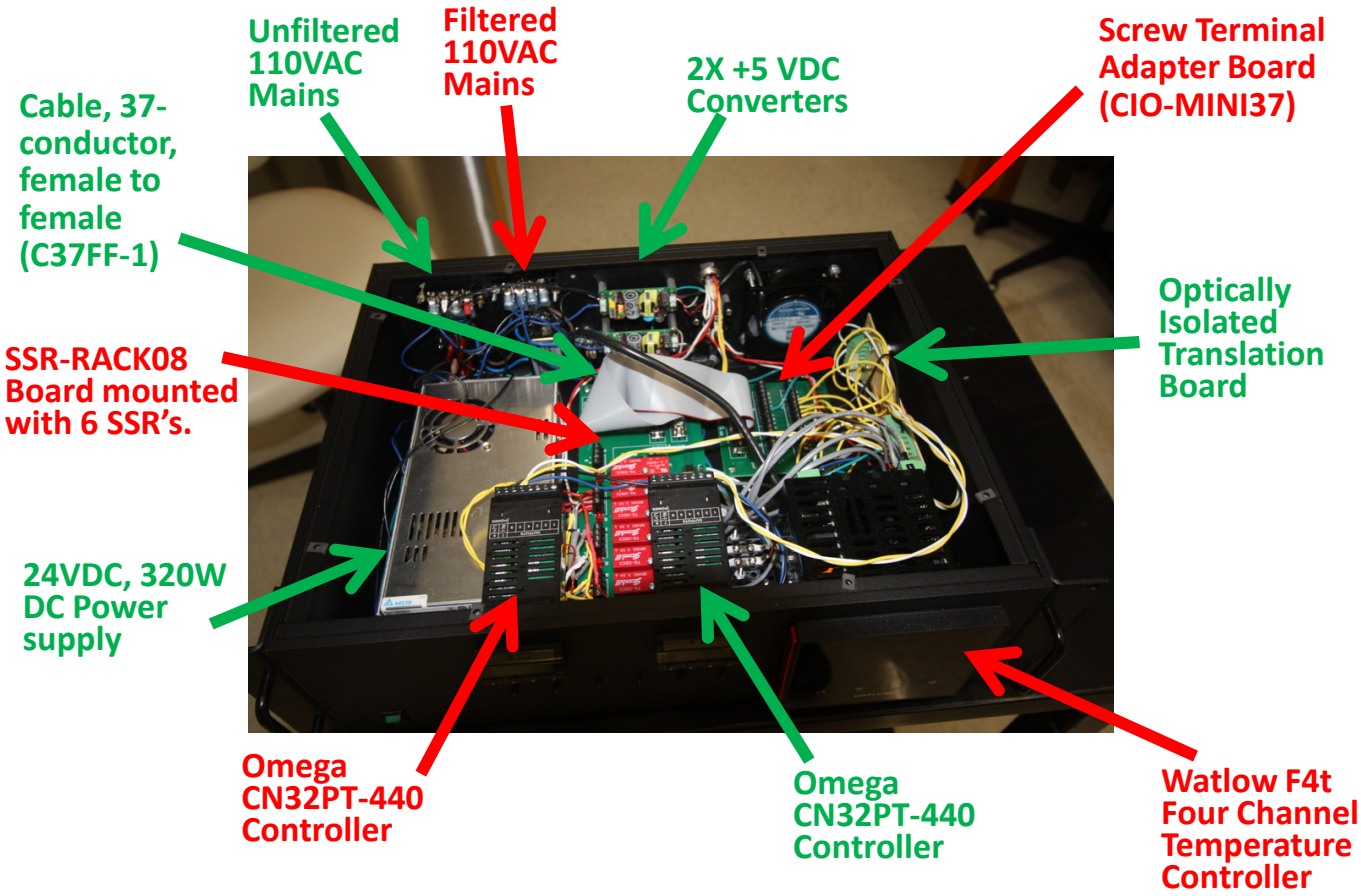

Dr. Jeffrey W. Hudgens, Hudgens@nist.gov, 240-314-6485
Dr. Jeffrey W. Hudgens, hudgens@nist.gov, 240-314-6485

Interior View of HDX-MS Temperature Controller (Side)

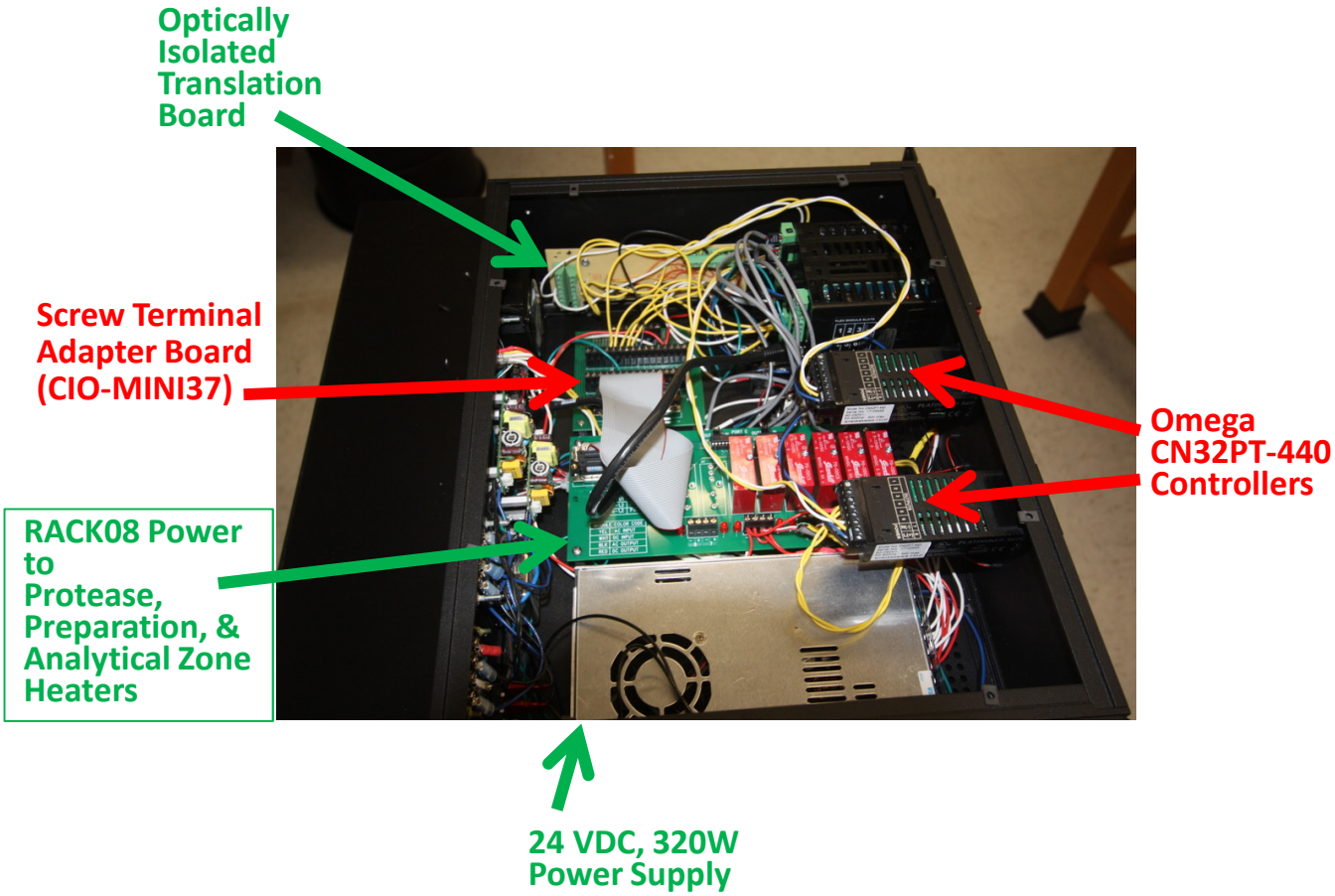

Dr. Jeffrey W. Hudgens, Hudgens@nist.gov, 240-314-6485
Dr. Jeffrey W. Hudgens, hudgens@nist.gov, 240-314-6485
Page 5 of 35

Back View of HDX-MS Temperature Controller

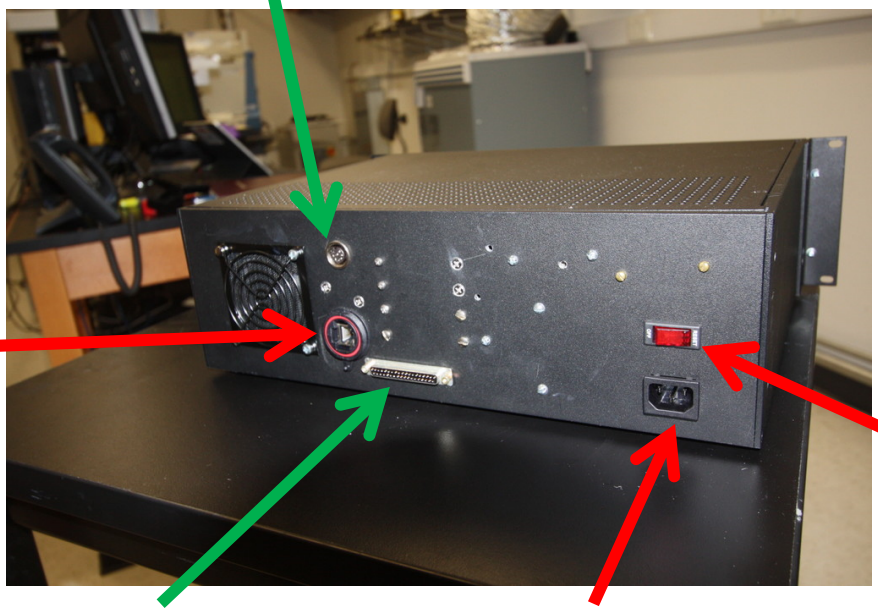

Dr. Jeffrey W. Hudgens, Hudgens@nist.gov, 240-314-6485
Dr. Jeffrey W. Hudgens, hudgens@nist.gov, 240-314-6485

Parts and Tools needed to Assemble T-Controller, Page 1/3

Item#	Vendor	Website	Cat#	Description	QNTY	COMMENTS
1	Ardara Technologies LP	https://www.ardaratech.com/	999101	UPLCF Cable – Female DB37 Bulkhead Connector with Labeled 22 Gauge Two-wire and Four-wire Cable Assemblies with Flying Leads at the Ends.	1	
2	Ardara Technologies LP	https://www.ardaratech.com/	999102	UPLCM Cable – Male DB37 Bulkhead Connector with Labeled 22 Gauge Two-wire and Four-wire Cable Assemblies with Flying Leads at the Ends.	1	
3	Ardara Technologies LP	https://www.ardaratech.com/	999103	UPLCP2P Cable – Point-to-Point Female DB37 to Male DB37 Cable assembly, consisting of Labeled 22 Gauge Two-wire and Four-wire	1	
4	Digikey	www.digikey.com	1003-1038-ND	SCREW LOCK FEMALE PANEL MNT 4-40	4	
5	Digikey	www.digikey.com	1053-1093-ND	FAN AXIAL 80X27MM 115VAC WIRE (MFR. OA825AP-11-1WB)	1	
6	Digikey	www.digikey.com	1144-1026-ND	Single Phase EMC/EMI Line Filter 10A 115V, 250V Rated AC 50/60Hz Single Stage Wire Leads	1	
7	Digikey	www.digikey.com	1145-1126-ND	AC/DC CONVERTER 24V 320W (MFR# PMF-24V320WCGB)	1	Main PS for heaters.
8	Digikey	www.digikey.com	1175-1467-ND	CONN IC DIP SOCKET 8POS GOLD	10	
9	Digikey	www.digikey.com	1470-1149-ND	AC/DC CONVERTER 5V 1A (Mfr. ECL05US05-T)	2	
10	Digikey	www.digikey.com	1655-1358-1-ND	Diode Standard 75V 300mA (DC) Through Hole DO-35	10	I think these are used in the optoislation circuits.
11	Digikey	www.digikey.com	1N4615-1-ND	DIODE ZENER 2V 500MW DO7	4	
12	Digikey	www.digikey.com	360-1733-ND	SWITCH ROCKER DPST 9A 125V	1	
13	Digikey	www.digikey.com	361-1232-ND	8 Position Circular Connector Plug, Male Pins Solder Cup Silver	2	
14	Digikey	www.digikey.com	361-1257-ND	8 Position Circular Connector Receptacle, Female Sockets Solder Cup Silver	2	
15	Digikey	www.digikey.com	36-2210-ND	HEX STANDOFF 6-32 ALUMINUM 1/2"	8	
16	Digikey	www.digikey.com	36-7313-ND	TERMINAL LOCKWASHER LUG #8 ANGLE	10	
17	Digikey	www.digikey.com	36-7315-ND	TERMINAL LOCKWASHER LUG #6 ANGLE	10	
18	Digikey	www.digikey.com	36-918-ND	CONN TERM LUG LOCKWASHER #6 FLAT	30	
19	Digikey	www.digikey.com	455-1126-ND	3 Position Rectangular Housing Connector Receptacle Natural 0.079" (2.00mm)	3	
20	Digikey	www.digikey.com	455-1127-1-ND	CONN TERM CRIMP PH 24-30AWG	20	
21	Digikey	www.digikey.com	486-4970-ND	19.69' (6.00m) Power Cord Black NEMA 5-15P To IEC 320-C19 SJT	1	
22	Digikey	www.digikey.com	609-3942-ND	TERM BLOCK 8POS 5.08MM PCB HORIZ	8	Handy for point-to-point wiring boards.
23	Digikey	www.digikey.com	626-1032-ND	15 Position D-Sub Receptacle, Female Sockets Connector, Free Hanging (In-Line) Solder Cup	5	
24	Digikey	www.digikey.com	67-1190-ND	LED 3MM HI-I RED DIFF6"LDS PNLMT	10	
25	Digikey	www.digikey.com	976-37RPE-ND	37 Position Two Piece Backshell Connector Gray 180° Unshielded	2	
26	Digikey	www.digikey.com	A121350-ND	TERM BLOCK RCPT 2POS VERT .100	10	Probably need 4. Used for +5VDC connections.
27	Digikey	www.digikey.com	A32503-ND	15 Position D-Sub Plug, Male Pins Connector, Free Hanging (In-Line) Solder Cup	4	
28	Digikey	www.digikey.com	A98076-ND	TERM BLOCK 2POS SIDE ENTRY 5MM	4	
29	Digikey	www.digikey.com	A98339-ND	TERM BLOCK 6POS SIDE ENTRY 5MM (MFR. 282836-6)	3	
30	Digikey	www.digikey.com	A98514-ND	CONN BARRIER STRIP 2CIRC 0.437"	2	
31	Digikey	www.digikey.com	A98514-ND	CONN BARRIER STRIP 2CIRC 0.437"	5	
32	Digikey	www.digikey.com	BC1148CT-ND	CAP CER 0.1UF 25V Y5V RADIAL	4	I use these a lot in some circuits to stabilize supply current.
33	Digikey	www.digikey.com	CDPM1002-ND	Linear AC DC Converter 1 Output 24V 100mA 120VAC Input	4	Use one with each RTD TX402
34	Digikey	www.digikey.com	CF14JT10K0CT-ND	RES 10K OHM 1/4W 5% AXIAL	20	
35	Digikey	www.digikey.com	CF14JT1K00CT-ND	RES 1K OHM 1/4W 5% AXIAL	20	
36	Digikey	www.digikey.com	CF14JT1K00CT-ND	RES 1K OHM 1/4W 5% CARBON FILM	20	
37	Digikey	www.digikey.com	CF14JT330RCT-ND	RES 330 OHM 1/4W 5% AXIAL	20	
38	Digikey	www.digikey.com	CF14JT680RCT-ND	RES 680 OHM 1/4W 5% AXIAL	20	
39	Digikey	www.digikey.com	CH779-ND	SWITCH ROCKER DPST 10A 125V	2	
40	Digikey	www.digikey.com	CLA383-ND	OPTOISO 3.75KV 2CH OPEN DRN 8 DIP	4	

1 Inch = 2.54 cm

Dr. Jeffrey W. Hudgens, Hudgens@nist.gov, 240-314-6485
Dr. Jeffrey W. Hudgens, hudgens@nist.gov, 240-314-6485

Parts and Tools needed to Assemble T-Controller, Page 2/3

41	Digikey	www.digikey.com	CP-1038-ND	8 Position Circular Connector Plug, Male Pins Solder	2	
42	Digikey	www.digikey.com	G80-18B	FAN GUARD METAL 80MM BLACK	1	
43	Digikey	www.digikey.com	H747-ND	MACHINE SCREW PAN PHILLIPS M4, PkG/100	1	
44	Digikey	www.digikey.com	HM1010-ND	Hammond Metal, Aluminum Chassis, Enclosed 13.000" L x 16.600" W x 5.250" H (330.20mm x 421.64mm x 133.35mm) Black, Model RM3U1913VBK	1	
45	Digikey	www.digikey.com	HM1336-ND	HANDLE 2.8" STEEL BLACK 1 PAIR	1	
46	Digikey	www.digikey.com	M9935CT-ND	ion LC (T-Type) EMI Filter 3rd Order Low Pass 1 Channel R = 0.05 Ohms, C = 0.01µF 5A Radial - 3 Leads	2	
47	Digikey	www.digikey.com	PB1033-ND	CIR BRKR THRM 10A 250VAC 50VDC	1	
48	Digikey	www.digikey.com	PB528-ND	CIR BRKR THRM 5A 125VAC 50VDC	1	
49	Digikey	www.digikey.com	PB529-ND	CIR BRKR THRM 10A 125VAC 50VDC	1	
50	Digikey	www.digikey.com	Q209-ND	PWR ENT RCPT IEC320-C14 PANEL QC	2	
51	Digikey	www.digikey.com	RC14JB100R-ND	RES 100 OHM 1/4W 5% AXIAL		
52	Digikey	www.digikey.com	RS212-ND	Resistor Kit 1-1M 1/6W, 365 pcs	1	Don't need this, but it is handy to have.
53	Digikey	www.digikey.com	SCRES-G-00.50-D-C	Jack to Plug 8p8c (RJ45, Ethernet) 1.64' (500.0mm) Shielded	1	
54	Digikey	www.digikey.com	SJ5003-0-ND	BUMPER CYLINDRICAL 0.44" DIA BLK	4	
55	Digikey	www.digikey.com	SJ5007-0-ND	BUMPER SQU 0.413"L X 0.413"W BLK	8	
56	Digikey	www.digikey.com	W126-50-ND	8 Conductor Multi-Conductor Cable Gray 22 AWG 50.0' (15.24m)	1	
57	Digikey	www.digikey.com	WM1008-ND	Contact Crimp Socket 18-24 AWG Gold	20	
58	Digikey	www.digikey.com	WM18230-ND	CONN QC RCPT 18-22AWG 0.250	15	
59	Digikey	www.digikey.com	WM2290CT-ND	Contact Crimp Pin 18-24 AWG Gold	32	
60	Digikey	www.digikey.com	WM5928-ND	CONN QC RCPT 18-22AWG 0.187	15	
61	Digikey	www.digikey.com	WMG80B	FAN GUARD 80MM WIRE MESH BLACK	1	
62	Digikey	www.digikey.com	Y0785-500A-ND	500 Ohm ±0.01% 0.6W Through Hole Resistor Radial Moisture Resistant, Non-Inductive Metal Foil	4	voltage drop for RTD circuits (requires reference quality resistor)
63	James Electronics Limited	www.jameco.com	23077	LED Mounting Hardware T1-3/4 Black	30	
64	James Electronics Limited	www.jameco.com	34761	LED Uni-Color Green 565nm 2-Pin T-1 3/4	10	
65	James Electronics Limited	www.jameco.com	103588	Single Spade Terminal 16-22 AWG 21mm 5.7mm Tin	30	
66	James Electronics Limited	www.jameco.com	230973	Connector Barrier Strip 2 Position 9.53mm Pitch Straight Panel Mount 15 Amp	4	
67	James Electronics Limited	www.jameco.com	230990	Connector Barrier Strip 4 Position 9.53mm Pitch Straight Panel Mount 15 Amp	4	
68	James Electronics Limited	www.jameco.com	303010	Flanged Spade Tongue Terminal 14-16AWG 18.72mm 7.47mm Tin Loose Piece	20	
69	James Electronics Limited	www.jameco.com	333973	LED Uni-Color Red 660nm 2-Pin T-1 3/4	20	
70	James Electronics Limited	www.jameco.com	489475	Quick Disconnect Terminal 18-22 AWG Female 22.6mm 9.65mm Electro-tin Loose Piece	10	
71	James Electronics Limited	www.jameco.com	489627	Quick Disconnect Terminal 18-22 AWG Female 21.84mm 9.65mm Electro-tin Loose Piece	20	
72	James Electronics Limited	www.jameco.com	489766	Quick Disconnect Terminal 14-16 AWG Female 22.6mm 9.65mm Tin Loose Piece	20	
73	James Electronics Limited	www.jameco.com	659382	Connector Jumper Male 2 Position ST	8	
74	James Electronics Limited	www.jameco.com	1541271	Diode P6KE15V Bi-Directional TVS12.8 Volt 600W DO-15	10	
75	James Electronics Limited	www.jameco.com	2160585	16-14 AWG BLUE NYLON SPADE TERMINAL	20	
76	James Electronics Limited	www.jameco.com	2202394	5 Foot 3 Conductor Detachable Power Cord	1	
77	James Electronics Limited	www.jameco.com	2206281	18 AWG 6 Color Stranded Tinned-Copper Hook-Up Wire Assortment 25 Feet	1	
78	James Electronics Limited	www.jameco.com	2283767	830 Point Solderless Plug-in Breadboard with 4 Power Rails 21-26AWG ABS	1	
79	James Electronics Limited	www.jameco.com	2284615	1460 Point Solderless Plug-in Breadboard with 4 Power Rails	1	
80	Measurement Computing	www.mccdaq.com	C37FF-1	Cable, 37-conductor ribbon, female to female, 1 ft.	1	
81	Measurement Computing	www.mccdaq.com	CIO-MINI37-VERT	Universal screw-terminal board, 37-pin D male connector, vertical	1	
82	Measurement Computing	www.mccdaq.com	SSR-ODC-05	Solid State Relay Module, Single, DC Switch, 3 to 60 VDC @ 3.5 A	6	
83	Measurement Computing	www.mccdaq.com	SSR-RACK08	Solid State Relay Backplane (Gordos/OPTO-22 Type Relays), 8-Channel	1	
84	OMEGA Engineering	www.omega.com	KHLV-0104/10-P	Thin film heater, 1" x 2" , 28 volts, 10W/in2 Polyimide Film heater with PSA	3	
85	OMEGA Engineering	www.omega.com	KHLV-0105/10-P	Thin film heater, 1" x 5" , 28 volts, 10W/in2 Polyimide Film heater with PSA	1	
86	OMEGA Engineering	www.omega.com	KHLV-0502/10-P	Thin film heater, 0.5" x 4" , 28 volts, 10W/in, Polyimide Film heater with PSA	7	
87	OMEGA Engineering	www.omega.com	KHLV-0504/10-P	Thin film heater, 0.5" x 4" , 28 volts, 10W/in2 Polyimide Film heater with PSA	2	
88	OMEGA Engineering	www.omega.com	KHLV-102/10-P	1"w x 2"L, KHLV Series, Rectangular, 28 Volts, Kapton Insulated Heaters with PSA	4	
89	OMEGA Engineering	www.omega.com	KHLV-2/10-P	Thin film heater, 2" dia, 28 volts, 10W/in2 Polyimide Film heater with PSA	1	
90	OMEGA Engineering	www.omega.com	ON-950-44004	Thermistor, 2252 Ohms at 25°C, 305 mm PFA leads	1	
91	OMEGA Engineering	www.omega.com	RTD-850	RTD Sensor with Miniature Threaded Housing	4	
92	OMEGA Engineering	www.omega.com	SA1-RTD-4W	RTD Sensor, 4-wire, 40 Inches (1m), Stripped leads	3	
93	OMEGA Engineering	www.omega.com	SA1-TH-44004-40-T	Thermistor, 2252 Ohms at 25°C, 1 meter (40") of Cable	3	
94	OMEGA Engineering	www.omega.com	TX402	Thermocouple//RTD input head mount RFID temperature 3 transmitter	5	
95	Thermal Devices	www.thermaldevices.com/		Watlow F4T Controller comprising one each of F4T1A1BAA1C4AAA, FMHA-RAAA-AAAA, FMHA-PAAA-AAAA, FMHA-CAAA-AAAA	1	
96		www.amazon.com		Molex 4-Pin Connector Kit 0.093" 2 Sets	1	

1 Inch = 2.54 cm

Dr. Jeffrey W. Hudgens, Hudgens@nist.gov, 240-314-6485
Dr. Jeffrey W. Hudgens, hudgens@nist.gov, 240-314-6485
Page 8 of 35

Parts and Tools needed to Assemble T-Controller, Page 3/3

		TOOLS				
97	Digikey	www.digikey.com	WM8423-ND	KIT QUICK DISCONNECT K-181	1	Most workbenches have this tool
98	OMEGA Engineering	www.omega.com	TX400-RFID	RFID programmer OMEGA Engineering	1	Absolutely required

1 Inch = 2.54 cm

Dr. Jeffrey W. Hudgens, Hudgens@nist.gov, 240-314-6485
Dr. Jeffrey W. Hudgens, hudgens@nist.gov, 240-314-6485

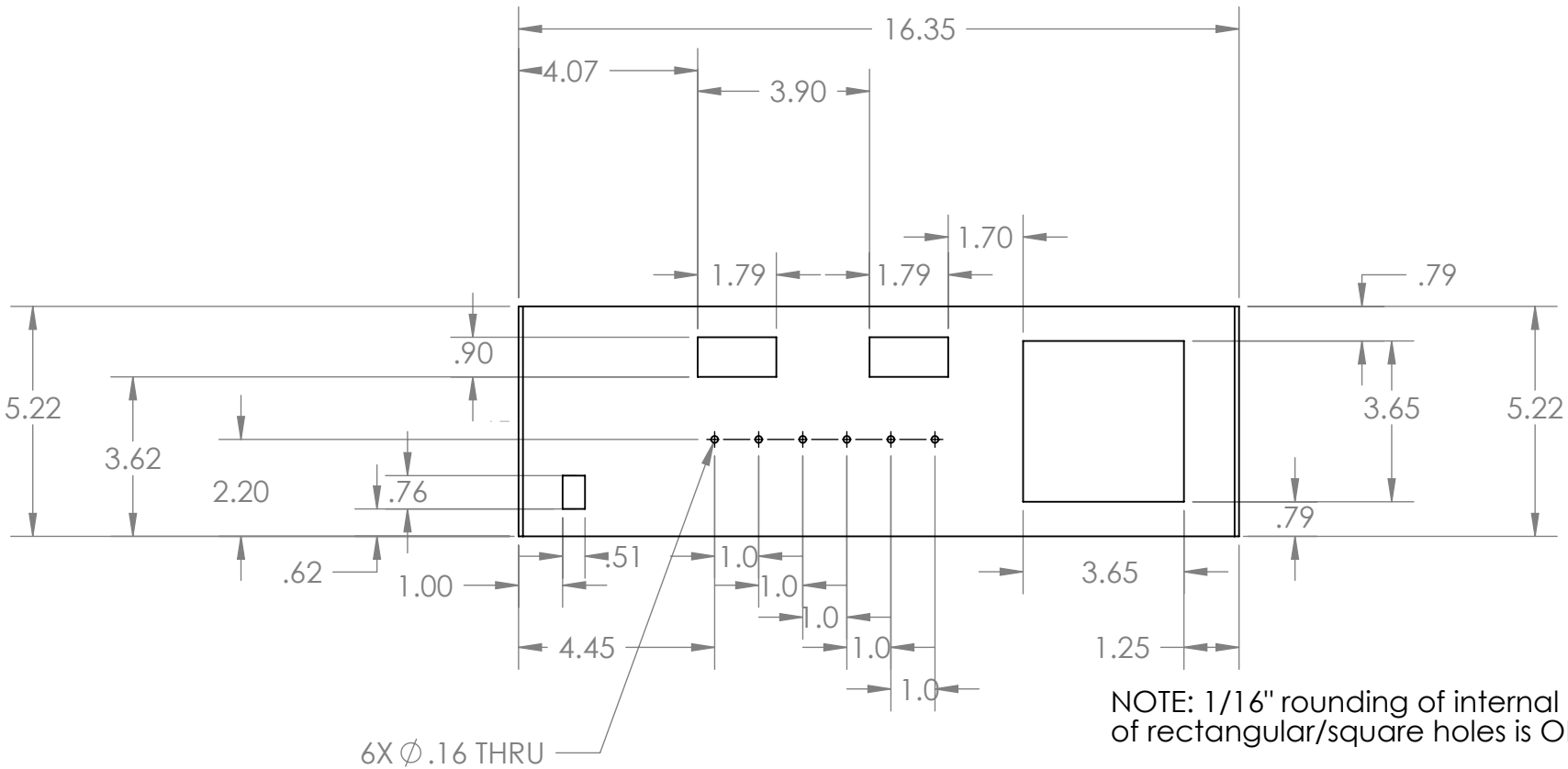

NOTE: 1/16" rounding of internal corners of rectangular/square holes is OK.

		UNLESS OTHERWISE SPECIFIED:		NAME	DATE
		DIMENSIONS ARE IN INCHES TOLERANCES: FRACTIONAL ± ANGULAR: MACH ± BEND ± TWO PLACE DECIMAL ± THREE PLACE DECIMAL ±	DRAWN		
			CHECKED		
			ENG APPR.		
			MFG APPR.		
		INTERPRET GEOMETRIC TOLERANCING PER:	Q.A.		
		MATERIAL	COMMENTS:		
NEXT ASSY	USED ON	FINISH			
APPLICATION		DO NOT SCALE DRAWING			

TITLE:
T-control Front Panel
8/13/2019

SIZE	DWG. NO.	REV
A		

SCALE: 1:4 WEIGHT: SHEET 1 OF 1

PROPRIETARY AND CONFIDENTIAL

THE INFORMATION CONTAINED IN THIS DRAWING IS THE SOLE PROPERTY OF <INSERT COMPANY NAME HERE>. ANY REPRODUCTION IN PART OR AS A WHOLE WITHOUT THE WRITTEN PERMISSION OF <INSERT COMPANY NAME HERE> IS PROHIBITED.

5 4 3 2 1

1 Inch = 2.54 cm

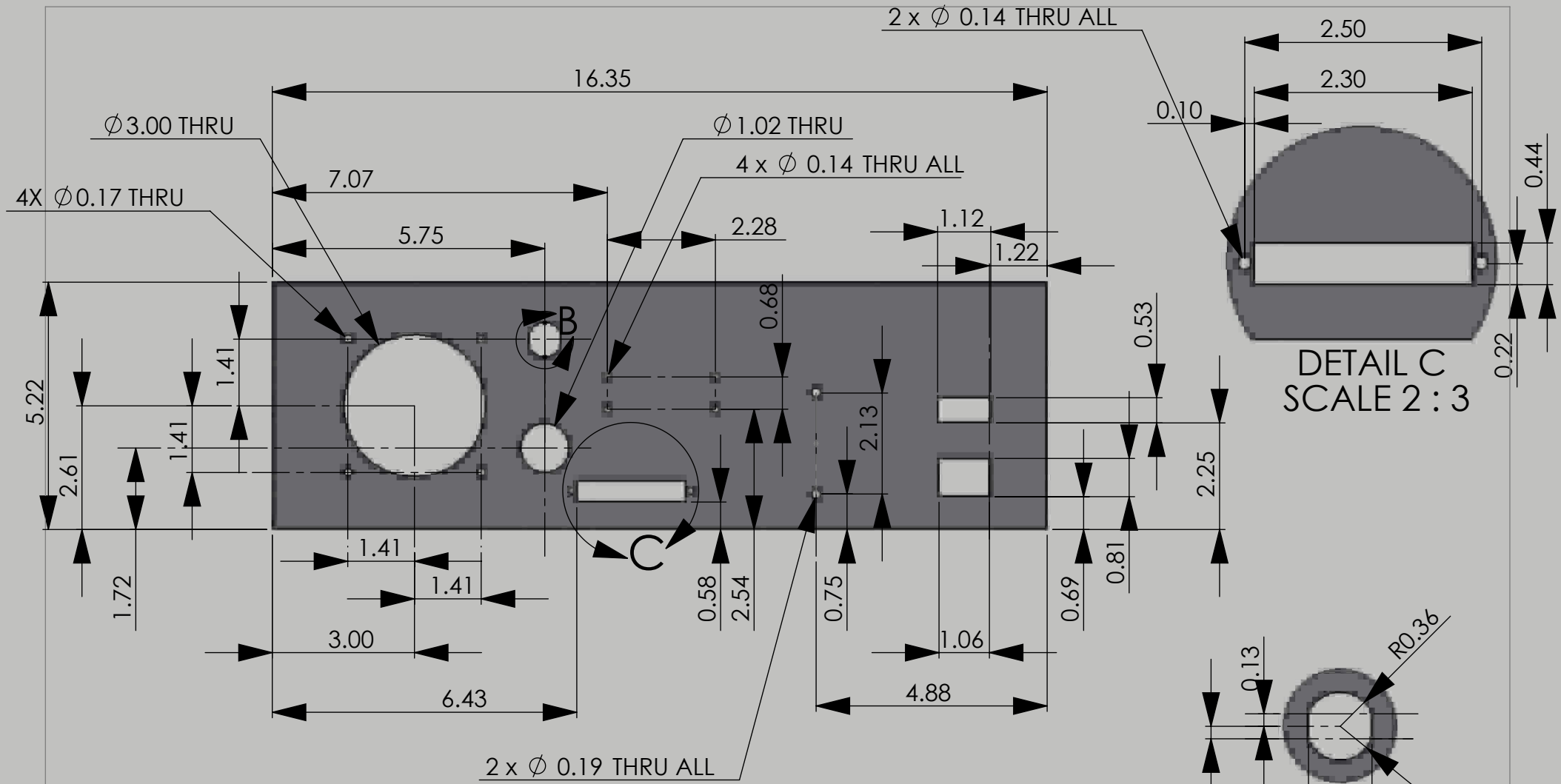

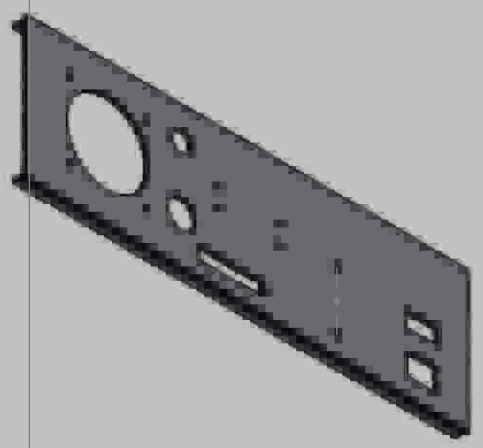

NOTE: 1/16" rounding of rectangular/square corners is OK.

		DIMENSIONS ARE IN INCHES TOLERANCES: FRACTIONAL ± ANGULAR: MACH ± BEND ± TWO PLACE DECIMAL ± THREE PLACE DECIMAL ±		NAME	DATE
			DRAWN		
			CHECKED		
			ENG APPR.		
			MFG APPR.		
		MATERIAL --	Q.A.		
			COMMENTS:		
NEXT ASSY	USED ON	FINISH --			
APPLICATION		DO NOT SCALE DRAWING			

PROPRIETARY AND CONFIDENTIAL
THE INFORMATION CONTAINED IN THIS DRAWING IS THE SOLE PROPERTY OF <INSERT COMPANY NAME HERE>. ANY REPRODUCTION IN PART OR AS A WHOLE WITHOUT THE WRITTEN PERMISSION OF <INSERT COMPANY NAME HERE> IS PROHIBITED.

<N>

Back Panel
7/25/2019)

SIZE	DWG. NO.	REV.
A		
SCALE:1:5	WEIGHT:	SHEET 1 OF 1

1 Inches 2.54 cm

Dr. Jeffrey W. Hudgens, Hudgens@nist.gov, 240-314-6485
Dr. Jeffrey W. Hudgens, hudgens@nist.gov, 240-314-6485

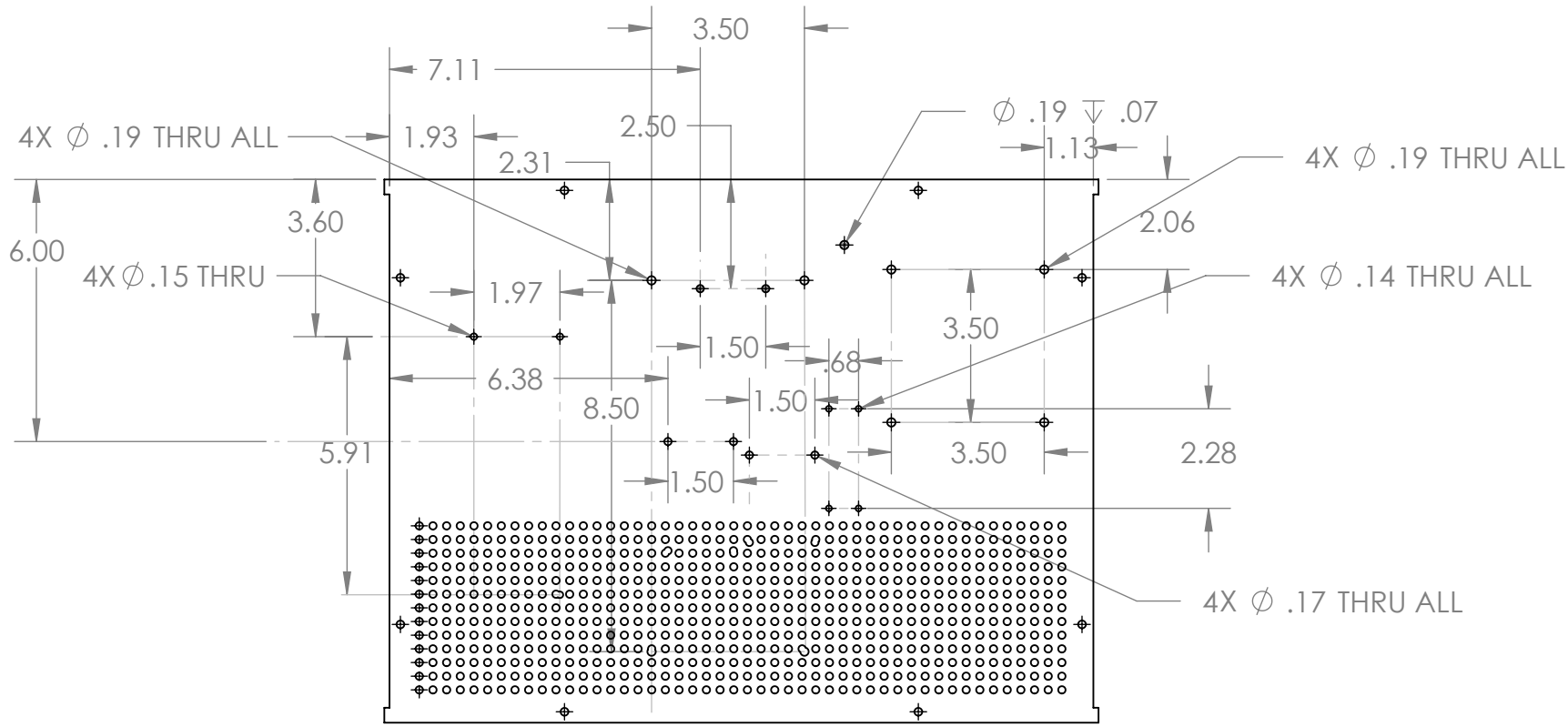

		UNLESS OTHERWISE SPECIFIED:		NAME	DATE
		DIMENSIONS ARE IN INCHES TOLERANCES: FRACTIONAL ± ANGULAR: MACH ± BEND ± TWO PLACE DECIMAL ± THREE PLACE DECIMAL ±	DRAWN		
			CHECKED		
			ENG APPR.		
			MFG APPR.		
		INTERPRET GEOMETRIC TOLERANCING PER:	Q.A.		
		MATERIAL	COMMENTS:		
NEXT ASSY	USED ON	FINISH			
APPLICATION		DO NOT SCALE DRAWING			

TITLE: Chassis Bottom Plate (hole locs)

SIZE	DWG. NO.	REV
A		
SCALE: 1:8	WEIGHT:	SHEET 1 OF 2

PROPRIETARY AND CONFIDENTIAL

THE INFORMATION CONTAINED IN THIS DRAWING IS THE SOLE PROPERTY OF <INSERT COMPANY NAME HERE>. ANY REPRODUCTION IN PART OR AS A WHOLE WITHOUT THE WRITTEN PERMISSION OF <INSERT COMPANY NAME HERE> IS PROHIBITED.

1 Inches=2.54 cm

Dr. Jeffrey W. Hudgens, hudgens@nist.gov, 240-314-6485

110 VAC Connections inside the T-controller (ver 2) Chassis

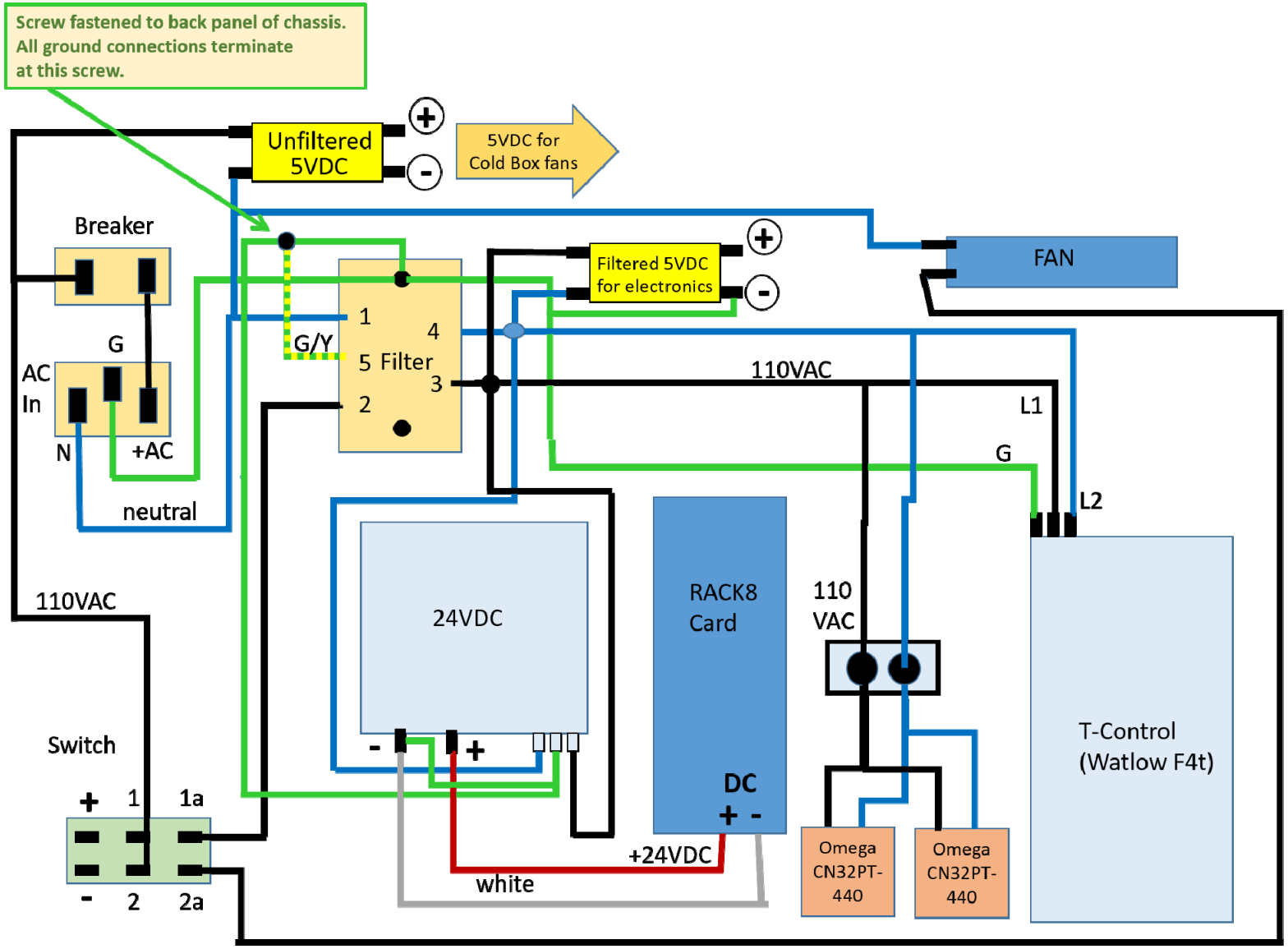

Dr. Jeffrey W. Hudgens, Hudgens@nist.gov, 240-314-6485
Dr. Jeffrey W. Hudgens, hudgens@nist.gov, 240-314-6485

STL File Inventory

Cable tethers.STL

Electric Sheild.STL

Valve Cable Anchor Plate.STL

Valve driver Mount_2x2.STL

Valve Handswich mount.STL

Valve Handswitch mount cap.STL

Dr. Jeffrey W. Hudgens, Hudgens@nist.gov, 240-314-6485

Dr. Jeffrey W. Hudgens, hudgens@nist.gov, 240-314-6485

SSR-RACK08

Eight-Channel Solid-State Relay (OPTO22, Gordos) Mounting & Interface Rack

Insert 37-pin ribbon cable (C37FF-1) here. Other end is seated into CIO-MINI37 screw terminal board

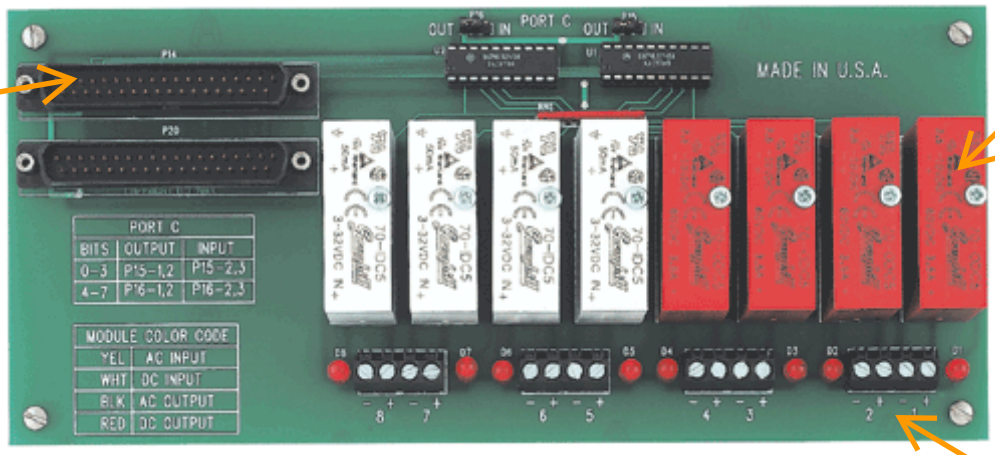

SSR-ODC-05 units are socketed in these positions. Ascertain that they correspond to active channels.

These terminals are used to drive the heater channels & front panel diodes.

Functional description

The SSR-RACK08 is a mounting and interface rack for use with industry-standard size solid state I/O modules. These modules provide 1500 V of isolation from harsh electrical environments for both digital inputs and outputs. Onboard TTL-level drivers provide the necessary drive current to control any compatible 5 V solid-state relay. The SSR senses (input) and switches (output) AC and DC voltages.

Screw terminal wiring

Each SSR-RACK08 module has two independent screw terminals. Use 12-22 AWG wire to connect signals to the screw terminals. The status LED is ON when a module is active.

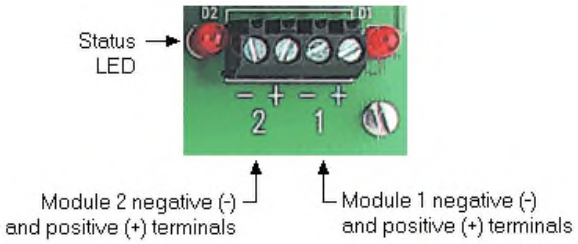

The screw terminal/module numbers correspond to 8255 ports:

- 1 to 4 correspond to PORT C Low Bit 0 to 3
- 5 to 8 correspond to PORT C High bits 4 to 7

Module input/output control OUT/IN jumpers

Two jumpers are provided to set the module type for PORT C High and PORT C Low.

- The jumper labeled **P15** controls modules 1 through 4, which are controlled by PORT C Low bits (bit 0 through bit 3).
- The jumper labeled **P16** controls modules 5 through 8, which are controlled by PORT C High bits (bit 4 through bit 7).

You cannot mix input and output modules within a group.

Solid-state I/O modules

The SSR-RACK24 has eight mounting positions for solid state I/O modules manufactured by Gordos, OPTO22, Grayhill, Western Digital, and others. These modules provide 1500 V of isolation from harsh electrical environments for both digital inputs and outputs. Mounting screw threads are provided for you to easily install the SSR modules. An example of an SSR module and mounting screw is shown below.

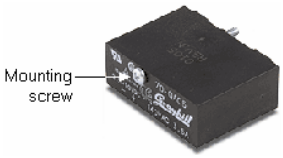

Contact MCC for compatible modules from the SSR-OAC, SSR-ODC, SSR-IAC and SSR-IDC module series.

Copyright © Measurement Computing Corporation

Dr. Jeffrey W. Hudgens, Hudgens@nist.gov, 240-314-6485
Dr. Jeffrey W. Hudgens, hudgens@nist.gov, 240-314-6485

37-pin connectors

The SSR-RACK08 has two 37-pin D connectors labeled **P14** and **P20** on the board. Most pins are wired 1:1, although pins 1, 2, and 11-19 are not passed through. A typical interface connector pin out is shown below.

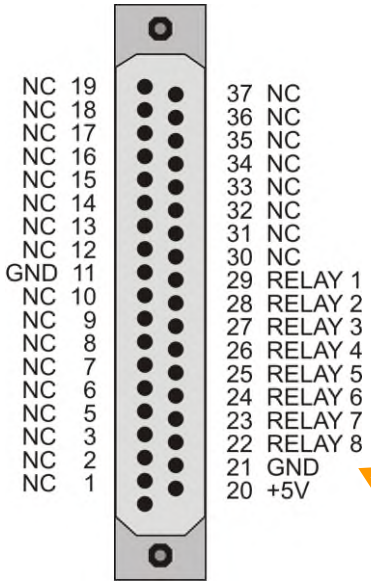

Use C37FF-x cables to connect with compatible MCC 24-bit digital I/O boards, such as the USB-DIO24/37. The 2nd connector is provided to access the remaining board connections.

Onboard buffers

Because most manufacturers of SSR racks do not supply output buffers on the SSR rack, simple digital I/O boards such as the PCI-DIO24, PCI-DIO96, and other manufacturer's 82C55-based digital I/O boards do not have the power to switch the SSRs. For example, to use an OPTO22 PB16 rack, you need to use a high-drive DIO board such as the PCI-DIO24H or PCI-DIO96H.

In order to be usable with all common TTL output boards, the SSR-RACK08 is designed with onboard buffers. With these buffers, you can plug directly into the SSR-RACK08 from your PCI-DIO24, PCI-DIO96, or any other manufacturer's 82C55-based digital I/O board.

SSR-RACK inverting logic

On an input SSR, the presence of a voltage raises the TTL output of the SSR from TTL low to TTL high. Because the SSR-RACK uses the conventional inverting logic, the completed circuit of SSR and SSR-RACK lowers the signal to the DIO board from TTL high (+5) to TTL low (GND). An output SSR completes a circuit when the DIO board TTL signal to the SSR is low. The circuit through the SSR is open when the signal from the DIO board is high.

Converting the SSR-RACK from inverting logic

The SSR-RACK follows the convention set by OPTO22 and followed by virtually all SSR rack manufacturers — the sense and control logic for the relays is inverted. This means that a 0 output from the digital I/O board causes an output relay to activate (complete the circuit), while a 1 (TTL high) causes the relay to deactivate. The chips which invert the logic are socketed and can be easily replaced with chips that do not invert the logic. Discuss your order with a technical sales engineer if you need non-inverting logic.

These pins correspond to the screw terminals on the CIO-MINI37 board.

Copyright © Measurement Computing Corporation

Dr. Jeffrey W. Hudgens, Hudgens@nist.gov, 240-314-6485
Dr. Jeffrey W. Hudgens, hudgens@nist.gov, 240-314-6485

F4T to RTD Module Connections

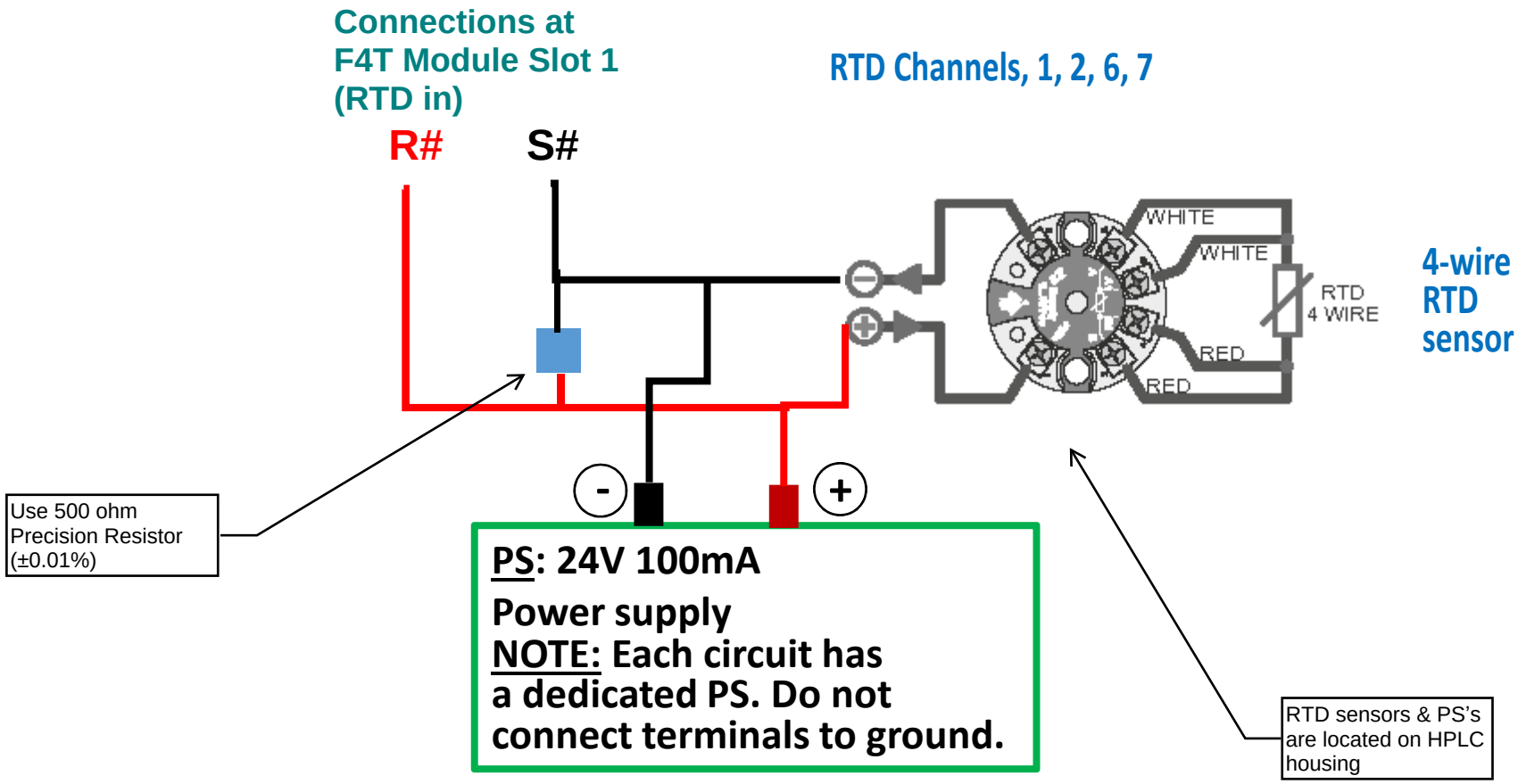

Dr. Jeffrey W. Hudgens, hudgens@nist.gov, 240-314-6485

Page 17 of 35

Connections of Optical Interpreter Board

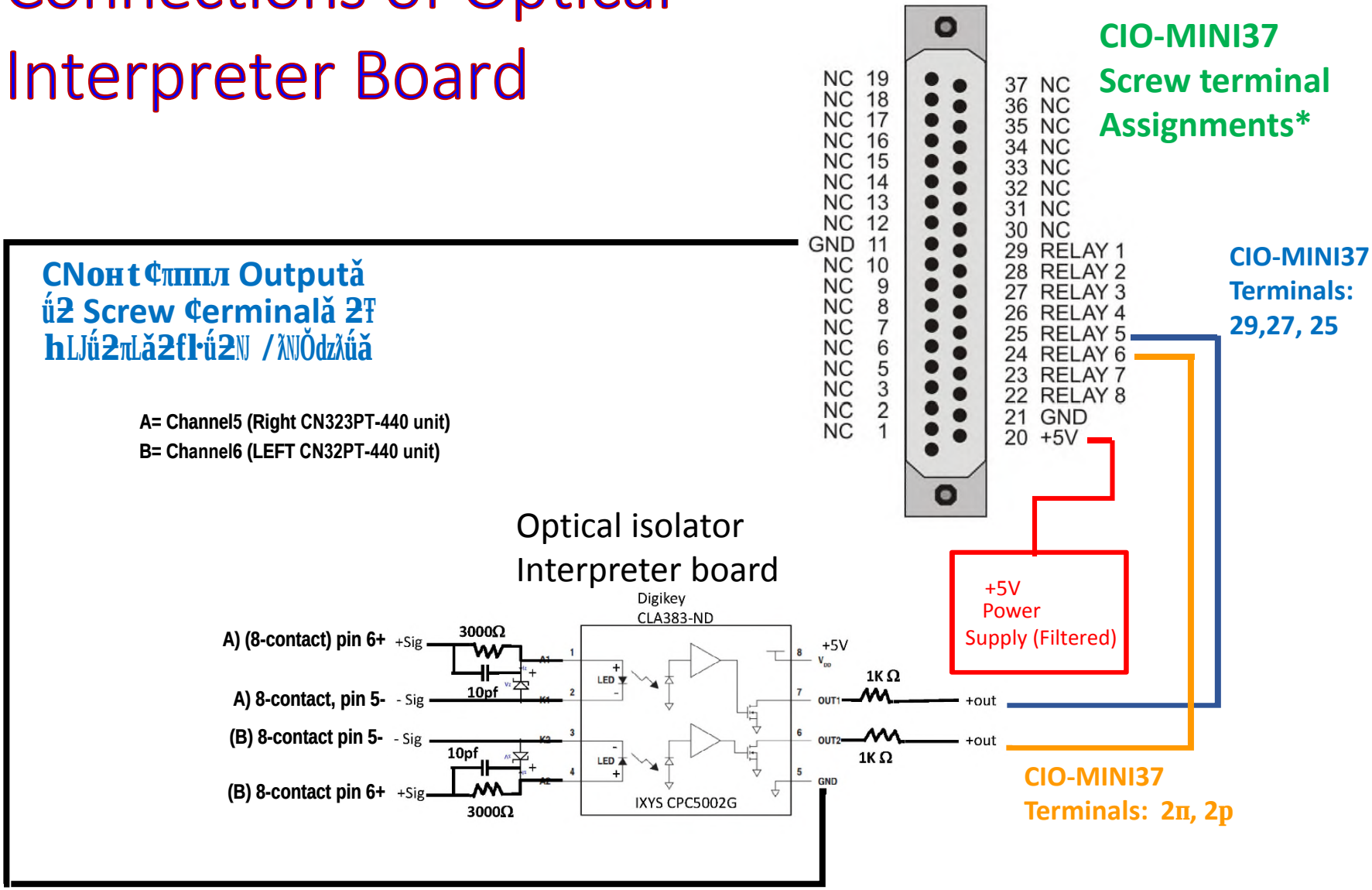

***NOTE:** The CIO-MINI37 has screw terminals. The diagram shows pin assignments on the SSR-RACK08. Numbers for the CIO-MINI37 and SSR-RACK08 are the same.

Dr. Jeffrey W. Hudgens, Hudgens@nist.gov, 240-314-6485

Dr. Jeffrey W. Hudgens, hudgens@nist.gov, 240-314-6485

Detail of Electrical Connections on RACK08

-- Diagram shown applies to Heater channels 1 to 6.

-- Heater Channel 6 is connected to round (Leads A & B) on side panel

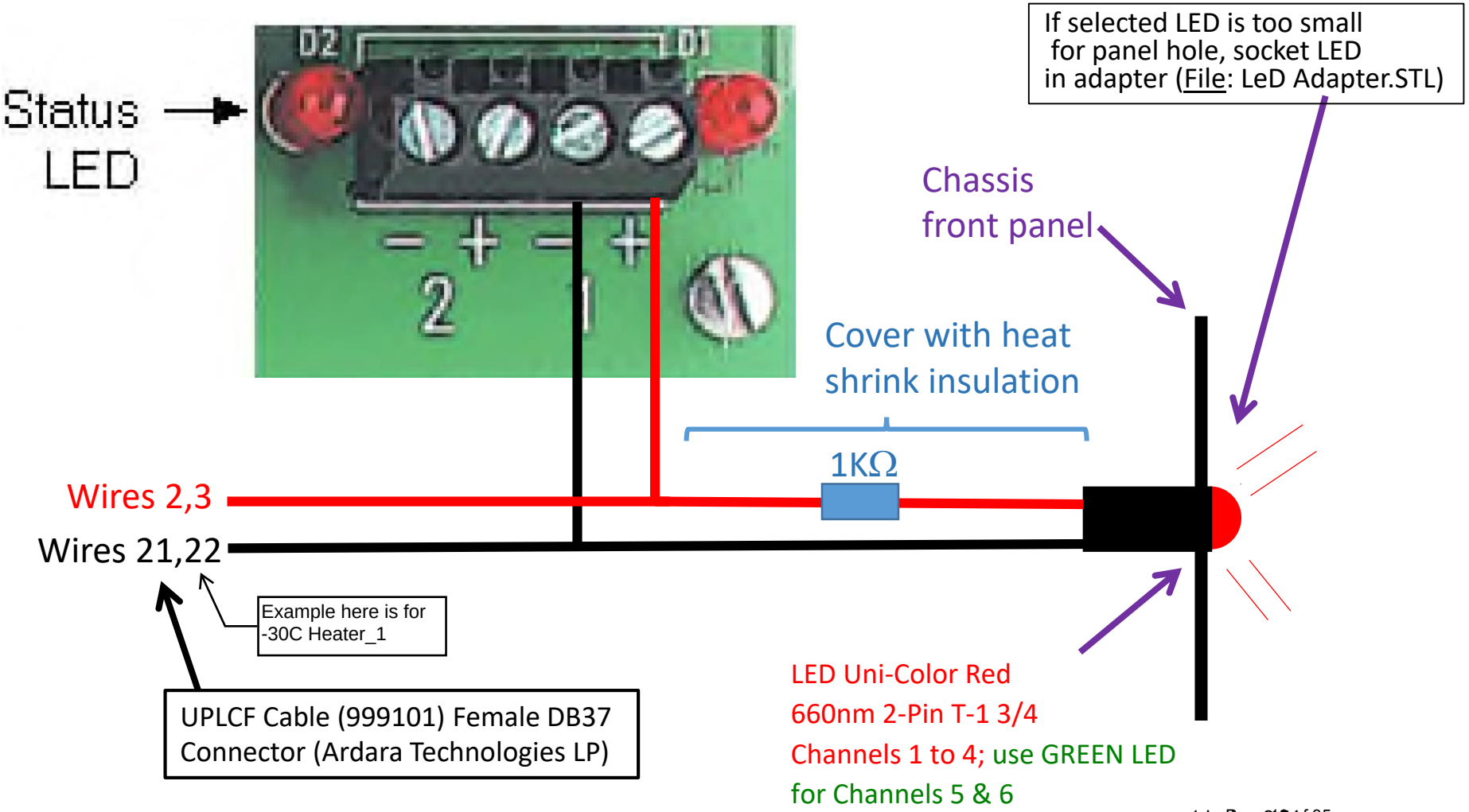

Dr. Jeffrey W. Hudgens, Hudgens@nist.gov, 240-314-6485

Dr. Jeffrey W. Hudgens, hudgens@nist.gov, 240-314-6485

Wiring the CN32PT-440 Controller Units

Note 1: -V and +V signals are isolated from true ground

Note 2: 110VAC connections go to barrier strip located under the RACK08 board.

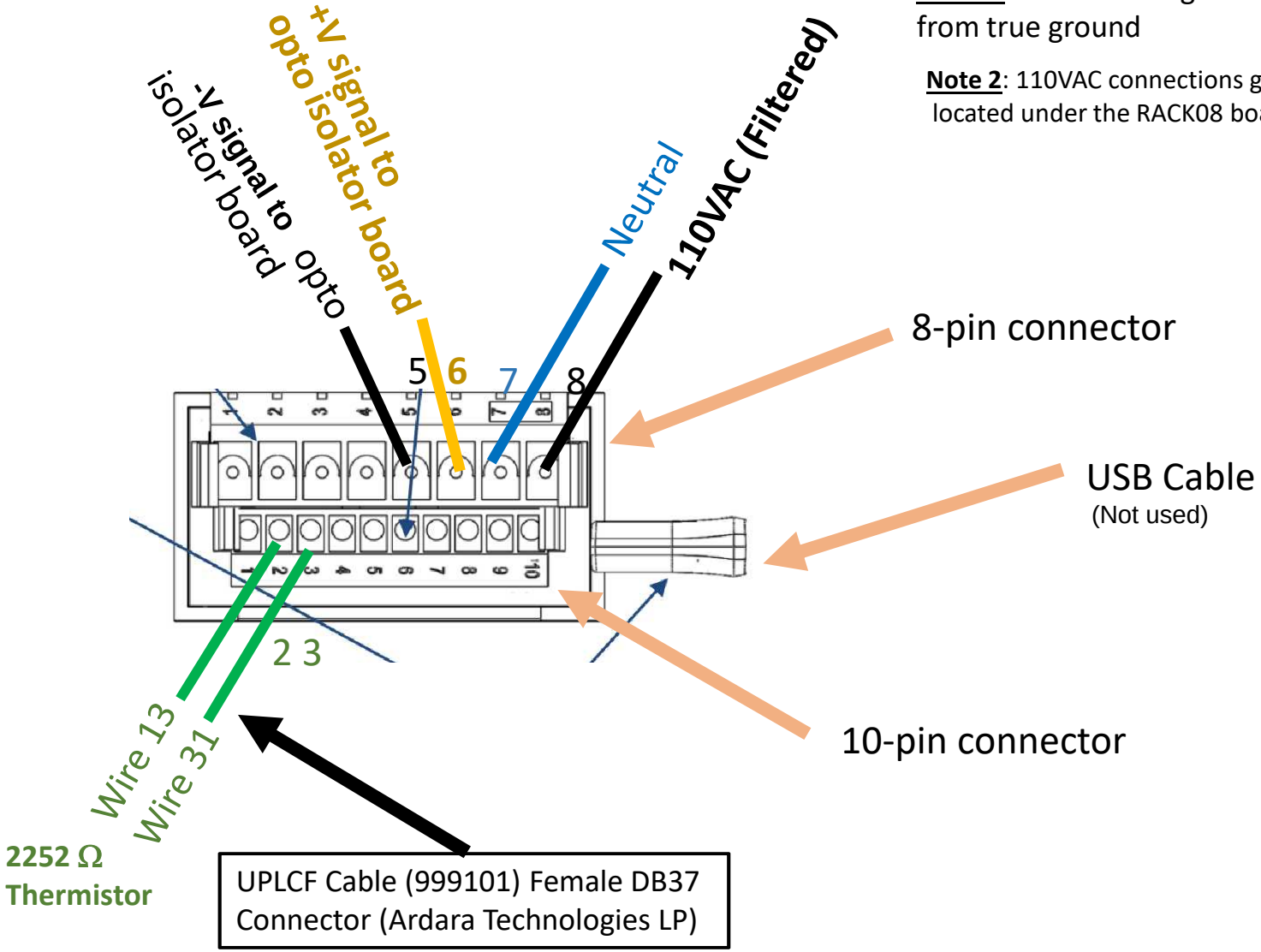

Dr. Jeffrey W. Hudgens, hudgens@nist.gov, 240-314-6485

Optical Isolator Interface Circuit

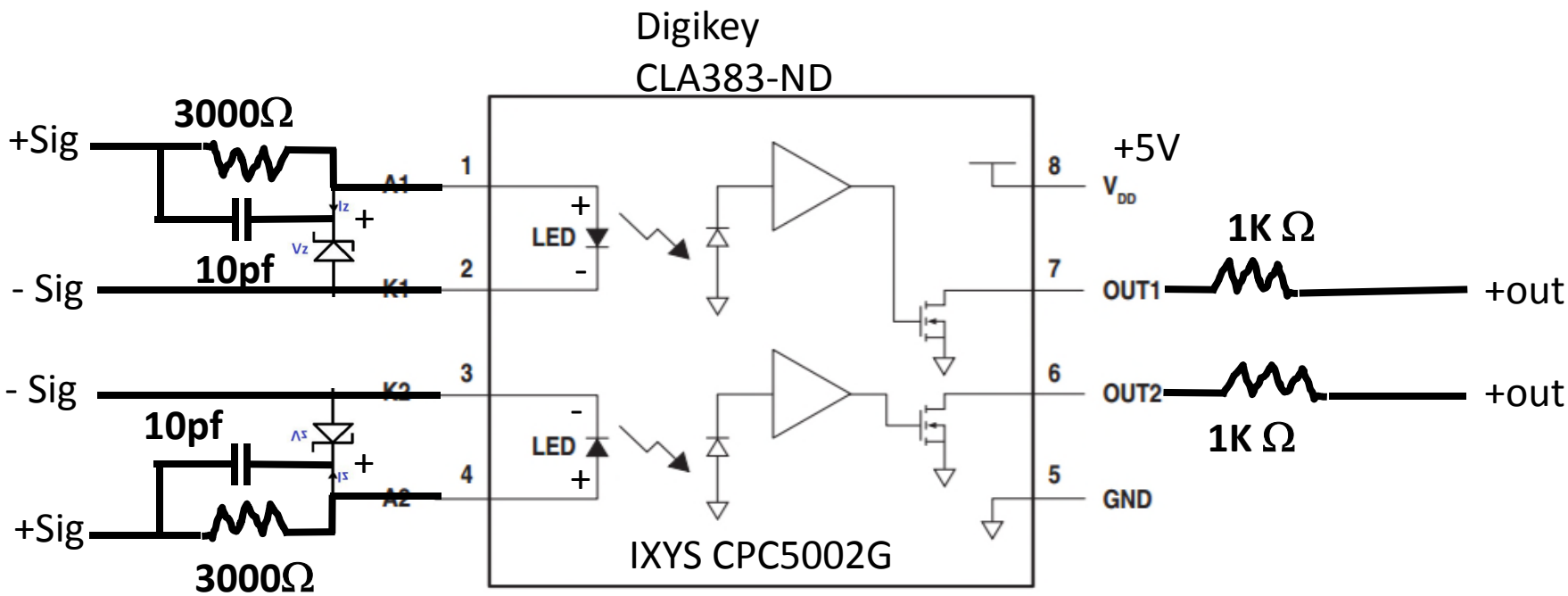

NOTE: The function of the capacitors is to improve timing precision. Since precision is not essential in this design the capacitors were not implemented in the final circuit. (See technical note on chip for accurate info.)

Dr. Jeffrey W. Hudgens, Hudgens@nist.gov, 240-314-6485

Dr. Jeffrey W. Hudgens, hudgens@nist.gov, 240-314-6485

View of Optical Isolator Interpreter Board

Input for +5VDC from 5VDC PS #2

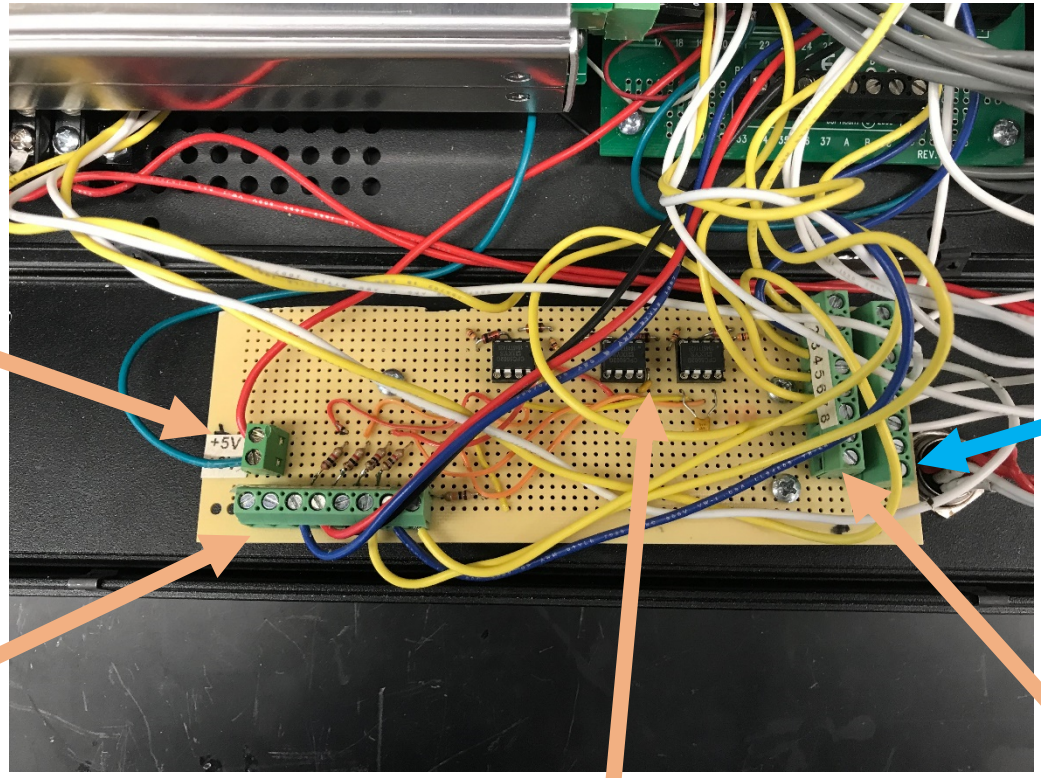

(-) terminals on CN1507 outputs

Output signal to MINI37 screw terminal board

(+) terminals on CN1507 outputs

2-channel opto-isolator (Digikey# CLA383-ND, Mfr #CPC5002G). **NOTE:** I tried three other isolator circuits and chips. This is the one that works.

Dr. Jeffrey W. Hudgens, Hudgens@nist.gov, 240-314-6485
Dr. Jeffrey W. Hudgens, hudgens@nist.gov, 240-314-6485

Diagram of the Electrical Cable Assignments

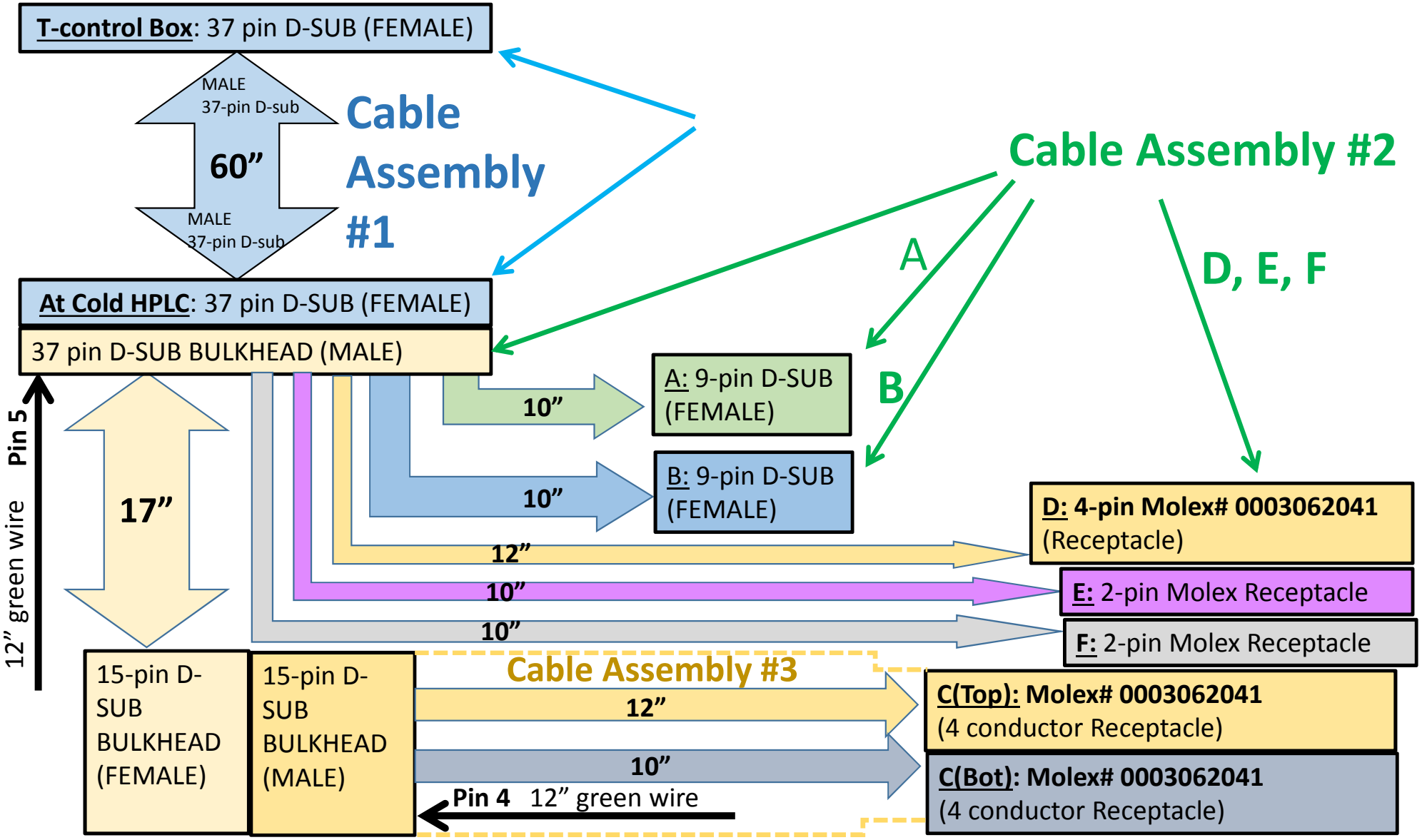

Dr. Jeffrey W. Hudgens, Hudgens@nist.gov, 240-314-6485

Dr. Jeffrey W. Hudgens, hudgens@nist.gov, 240-314-6485

Zone View of Interface to T-Control 37-PIN DIN Connector

	A	B	C	D
1	**ZONE**	**FUNCTION**		**T-control Box Panel Mount #1: 37-PIN CONNECTOR (FEMALE)**
2	A	**RTD 1(+)**		**19**
3	A	**RTD 1(-)**		**37**
4	A	**Heater1(+)**		**2, 3**
5	A	**Heater1(-)**		**21, 22**
6	A	**Fan(+)**		**1**
7	A	**Fan(-)**		**20**
8	B	**RTD 2(+)**		**18**
9	B	**RTD 2(-)**		**36**
10	B	**Heater2(+)**		**4, 5**
11	B	**Heater2(-)**		**23, 24**
12	B	**Ground**		**12**
13	C(Top)	**Thermistor3(+)**		**17**
14	C(Top)	**Thermistor3(-)**		**35**
15	C(Top)	**Heater3(+)**		**6, 7**
16	C(Top)	**Heater3(-)**		**25, 26**
17	C(Top)	**Ground**		**30**
18	**C(Bot)**	**Thermistor4(+)**		**16**
19	C(Bot)	**Thermistor4(-)**		**34**
20	C(Bot)	**Heater4(+)**		**8, 9**
21	C(Bot)	**Heater4(-)**		**27, 28**
22	**D**	**Thermistor5(+)**		**15**
23	**D**	**Thermistor5(-)**		**33**
24	**D**	**Heater5(+)**		**10, 11**
25	**D**	**Heater5(-)**		**29**
26	E	**RTD6(+)**		**14**
27	E	**RTD6 (-)**		**32**
28				
29	F	**RTD 7(+)**		**13**
30	F	**RTD 7(-)**		**31**

]
-30 ^{o}C Zone

0 ^{o}C Zone

Top Protease Column Mount

Bottom Protease Column Mount

Provides condensation/frost protection on shafts of Valves #1, #2, $4.

Temperature of coolant at the exit of B & C Zones (Coolant valve sets cooling watts for these zones.)

Coolant temperature entering box from cooler.

Dr. Jeffrey W. Hudgens, Hudgens@nist.gov, 240-314-6485
Dr. Jeffrey W. Hudgens, hudgens@nist.gov, 240-314-6485

HDX-Box Internal Wiring Harness Connections

ZONE	FUNCTION	37-PIN CONNECTOR	LENGTH & WIRE GAUGE (IN)	TERMINATING FEMALE CONNECTOR (PINS)	MALE CONNECTOR (PINS)	TERMINATING Type
A (-30°C)	RTD 1(+) RTD 1(-) Heater1(+) Heater1(-) Fan1(+) Fan1(-) Ground	**19** **37** **2,3** **21,22** **1** **20**		**9-pin SubD Female (A)** **1** **6** **2, 7** **3, 8** **5** **9** **8**	**9-pin SubD Male (A)** **1** **6** **2, 7** **3, 8** **5** **9** **8**	
B	RTD2(+) RTD2(-) Heater2(+) Heater2(-) Fan2(+) Fan2(-) Ground	**18** **36** **4,5** **23,24** **12**		**9-pin SubD Female (B)** **1** **6** **2, 7** **3, 8** **5** **9** **8**	**9-pin SubD Male (B)** **1** **6** **2, 7** **3, 8** **5** **9** **8**	
C(top)	Thermistor3(+) Thermistor3(-) Heater3(+) Heater3(-) Ground	17 35 6,7 25,26 30 12		**15-pin DIN Female (C)** (Amphenol FCI Part# G17S1500110EU) **1** **9** **2, 10** **3, 11** **4**	**15-pin DIN Male (C)** (Amphenol FCI Part# DA15P064TXLF) **1** **9** **2, 10** **3, 11** **4**	**Plastic Male Connector (D)** (Molex Part# 0050291758) 1 2 3 4
C(Bot)	Thermistor4(+) Thermistor4(-) Heater4(+) Heater4(-)	16 34 8,9 27,28		**15-pin DIN Female (C)** **8** **15** **6, 13** **7, 14**	**15-pin DIN Male (C)** **8** **15** **6, 13** **7, 14**	
D	Thermistor5(+) Thermistor5(-) Heater5(+) Heater5(-)	15 33 10,11 29,30		**Plastic Female Connector(D)** (Molex Part# 0003062041) 1 2 3 4	**Plastic Male Connector (D)** (Molex Part# 0050291758) **1** **2** **3** **4**	

Dr. Jeffrey W. Hudgens, Hudgens@nist.gov, 240-314-6485
Dr. Jeffrey W. Hudgens, hudgens@nist.gov, 240-314-6485
Page 25 of 35

Electrical Connections within the 6-Channel T-controller

ZONE	FUNCTION	T-control Box Panel ,37-PIN CONNECTOR (FEMALE)[1]	RACK0 8 SSR board[2]	ClO-MINI37	8-Pin Connector (output) [3]	CN32PT-440 A= Channel5 (Right) B= Ch6 (LEFT) C= Optical Isolator Circuit	Trans-lation Board (IN)[4]	Trans-lation Board (OUT)	F4T Module Slot 1 (RTD in) [5]	F4T Module Slot 4 (Thermistor)[6]	F4T Module Slot 6 (Digital Out) [7]
-30C	-30C RTD1(+)	19 (red)							R1		
-30C	-30C RTD1(-)	37 (Blk)							S1		
-30C	*Heater Signal 1*			Pin 29							D1
-30C	-30C Heater1(+)	2, 3 (red/blk)	CH1(+)								
-30C	-30C Heater1(-)	21, 22	CH1(-)								
	(Unfiltered +5V) Fan(+)	1									
	(Unfiltered +0V) Fan(-)	20									
0C	(0C) RTD2(+)	18							R2		
0C	(0C) RTD2(-)	36							S2		
0C	*Heater Signal 2*			Pin 28							D2
0C	(0C) Heater2(+)	4, 5 (red/blk)	CH2(+)								
0C	(0C) Heater2(-)	23, 24	CH2(-)								
	Chassis Ground[8]	12									B1
Prot(Top)	Thermistor3(+)	17								S3	
Prot(Top)	Thermistor3(-)	35								R3	
Prot(Top)	*Heater Signal 3*			Pin 27							D3

[1] Use UPLCF Cable mounted on back panel; Female DB37 Bulkhead Connector with Labeled 22 Gauge Two-wire and Four-wire Cable Assemblies with Flying Leads at the Ends (Ardara Technologies LP part# 999101). **NOTE:** Most commercial pre-wired connectors cannot carry the current required by heaters.

[2] Populate board with six Measurement Computing part# SSR-ODC-05 (Solid State Relay Module, Single, DC Switch, 3 to 60 VDC @ 3.5 A).

[3] Reference Digikey Part # 361-1257-ND (Amphenol Sine Systems Corp, part #T3507009U), which is mounted on back panel.

[4] Reference schematics for Optical Isolation Interpreter Board, page XXX.

[5] Reference Drawings for RTD Input schematic, page XXX. Connect a precision 500 ohm (±0.01 %) resistor across each R# & S# terminal pair. Use Digikey part Y0785-500A-ND or equivalent.

[6] Reference Drawings for Thermistor Input schematic, page XXX.

[7] Reference Slot 6: Digital Out schematic (Page XX). **Before connecting the bridge cable** between ClO-MIN37 and Translation board (RACK08), set User Selectable Output Voltage to 5 volts via a software switch. Second, connect B1 terminal to chassis ground (See footnote 8.).

[8] Chassis ground is a clean, unoxidized screw that extends through the back panel of the chassis. To assure good contact with the chassis, remove all paint or powder coating from the immediate area. Use nuts to firmly clamp leads to the screw. Ground potential on the cold box is established by terminating (e.g. clamping) ***T-control Box Panel ,37-PIN CONNECTOR (FEMALE) pin 12*** wire onto the stainless steel coolant tubing in the box.

Dr. Jeffrey W. Hudgens, Hudgens@nist.gov, 240-314-6485
Dr. Jeffrey W. Hudgens, hudgens@nist.gov, 240-314-6485

Electrical Connections within the 6-Channel T-controller

ZONE	FUNCTION	T-control Box Panel ,37-PIN CONNECTOR (FEMALE)[1]	RACK0 8 SSR board[2]	CIO-MINI37	8-Pin Connector (output) [3]	CN32PT-440 A= Channel5 (Right) B= Ch6 (LEFT) C= Optical Isolator Circuit	Trans-lation Board (IN)[4]	Trans-lation Board (OUT)	F4T Module Slot 1 (RTD in) [5]	F4T Module Slot 4 (Thermistor)[6]	F4T Module Slot 6 (Digital Out) [7]
Prot(Top)	Heater3(+)	6, 7 (red/blk)	CH3(+)								
Prot(Top)	Heater3(-)	25, 26 (grn/wht)	CH3(-)								
Prot(Bot)	Thermistor4(+)	16								S4	
Prot(Bot)	Thermistor4(-)	34								R4	
Pot(Bot)	*Heater Signal 4*			Pin 26							D4
Prot(Bot)	Heater4(+)	8, 9 (red/blk)	CH4(+)								
Pot(Bot)	Heater4(-)	27, 28 (grn/wht)	CH4(-)								
V#2 shaft	Thermistor5(+)	15				A) (10 Contact) pin 2+ (Red)					
V#2 shaft	Thermistor5(-)	33				(A) (10 Contact) pin 3- (Blk)					
V#2 shaft	*Heater Signal 5*			Pin 25				1+(Yel)			
V#2 shaft	Heater5(+)	10, 11 (red/blk)	CH5(+)								
V#2 shaft	Heater5(-)	29, 30 (grn/wht)	CH5(-)								
V#2 shaft	Translation Signal 5					(A) (8-contact) pin 6+ (+V to C)	1+				
V#2 shaft	Translation Signal 5					(A) 8-contact, pin 5- (+0V to C)	1-				
V#3 shaft	Thermistor8(+)				Pin 5 (Yel)	(B) (10-contact) pin 2+ (Yel)					
V#3 shaft	Thermistor8(-)				Pin 6 (Yel)	(B) (10-contact) pin 3- (Yel)					
V#3 shaft	*Heater Signal 6*			Pin 24				2+(Blk)			
V#3 shaft	Heater6(+)		CH6(+)		Pin 7 (RED)						
V#3 shaft	Heater6(-)		CH6(-)		Pin 4 (Wht)						
V#3 shaft	Translation Signal 6					(B) 8-contact pin 6+ (+V to C)	2+				
V#3 shaft	Translation Signal 6					(B) 8-contact pin 5- (+0V to C)	2-				
	Connections on the connector				Connect: 1 to 8, 2 to 3						

1 Inch = 2.54 cm

Dr. Jeffrey W. Hudgens, Hudgens@nist.gov, 240-314-6485

Dr. Jeffrey W. Hudgens, hudgens@nist.gov, 240-314-6485

Electrical Connections within the 6-Channel T-controller

ZONE	FUNCTION	T-control Box Panel ,37-PIN CONNECTOR (FEMALE)[1]	RACK0 8 SSR board[2]	CIO-MINI37	8-Pin Connector (output) [3]	CN32PT-440 A= Channel5 (Right) B= Ch6 (LEFT) C= Optical Isolator Circuit	Trans-lation Board (IN)[4]	Trans-lation Board (OUT)	F4T Module Slot 1 (RTD in) [5]	F4T Module Slot 4 (Thermistor)[6]	F4T Module Slot 6 (Digital Out) [7]
Loop 2 Exit	(Coolant Out) RTD6(+)	14							R3		
Loop 2 Exit	(Coolant Out) RTD6(-)	32							S3		
Loop 1 Enter	(Coolant IN) RTD7(+)	13							R4		
Loop 1 Enter	(Coolant IN) RTD7(-)	31							S4		
GND	Chassis Ground*			Pin 11							
+0V	From Filtered +0VDC PS			Pin 21							
+5VDC	From Filtered +5VDC PS			Pin 20							
110VAC	Neutral (Blue)					(A & B) Pin 7 (Blu)					
110 VAC	Hot (Black)					(A & B) Pin 8 (Blk)					

Dr. Jeffrey W. Hudgens, Hudgens@nist.gov, 240-314-6485
Dr. Jeffrey W. Hudgens, hudgens@nist.gov, 240-314-6485

Watlow F4T Module Schematics 1/3

SLOT 4: Thermistor input

Thermistor (High Density) **FMHA - PAAA - A _ _ _**

Slot 4

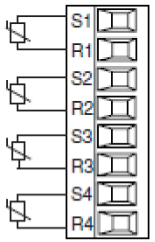

- >20 MΩ input impedance
- 0 to 40kΩ, 0 to 20kΩ, 0 to 10kΩ, 0 to 5kΩ
- 2.252kΩ and 10kΩ base at 77°F (25°C)
- Drive current is 109 µA as a constant current source
- User-selectable curves for Alpha Technics, BetaTHERM and YSI
- User-scaling support for Steinhart-Hart coefficients

Thermistor Curve Setting	Base R @ 25 °C	Alpha Technics	Beta Therm	YSI
Curve A	2.252K	Curve A	2.2K3A	004
Curve B	10K	Curve A	10K3A	016
Curve C	10K	Curve C	10K4A	006
Custom	Use Steinhart-Hart equation coefficients (A, B and C) from thermistor manufacturer corresponding to the terms of the Steinhart-Hart equation: $1 / T = A + B\ln(R) + C(\ln(R))^3$			

Dr. Jeffrey W. Hudgens, Hudgens@nist.gov, 240-314-6485
Dr. Jeffrey W. Hudgens, hudgens@nist.gov, 240-314-6485
Page 29 of 35

Slot 1:RTD Input

Slot 1

Input Connections (cont.)

RTD FMHA - [R] A A A - A _ _ _

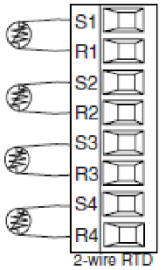

- Platinum, 100 and 1kΩ @ 32°F (0°C) calibration to DIN curve (0.00385 Ω/Ω/°C)
- RTD excitation current of 0.09mA typical. Each ohm of lead resistance may affect the reading by 2.55°C for a 100Ω platinum sensor or 0.25°C for a 1kΩ sensor (see table to right)

AWG	Ohms/ 1000ft
14	2.575
16	4.094
18	6.510
20	10.35
22	16.46
24	26.17
26	41.62
28	66.17

Process FMHA - [R] A A A - A _ _ _

Volts

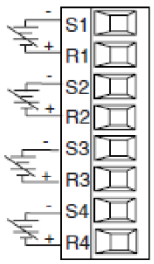

Milliamps

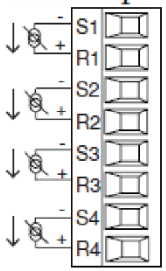

- 0 to 20mA @ 100 Ω input impedance
- 0 to 10V⎓ (dc) @ 20kΩ input impedance
- 0 to 50mV⎓ (dc) @ 20MΩ input impedance
- Scalable

Dr. Jeffrey W. Hudgens, Hudgens@nist.gov, 240-314-6485
Dr. Jeffrey W. Hudgens, hudgens@nist.gov, 240-314-6485

Slot 6: Digital out

8

Output Connections

Six Digital Outputs

Slot 6

FMHA - [C] A A A - A _ _ _

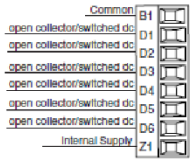

Open Collector

- Maximum switched open collector voltage is 32V⎓ (dc)
- 400mA, maximum open circuit voltage of 25V⎓ (dc), typical 8V⎓ (dc) at 80mA
- Maximum output sink current per output is 1.5A (external class 2 or SELV* supply required)
- Total sink current for all outputs not to exceed 8A
- Do not connect outputs in parallel

* Safety Extra Low Voltage

Switched DC

- User selectable voltage, 5V⎓ (dc) at 130mA or 19 to 22V⎓ (dc) at 80mA

Open Collector Outputs

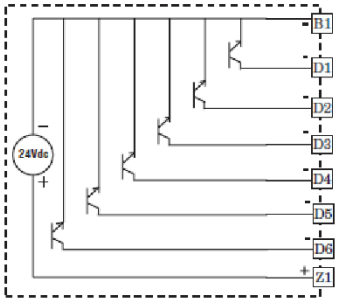

Switched DC Outputs

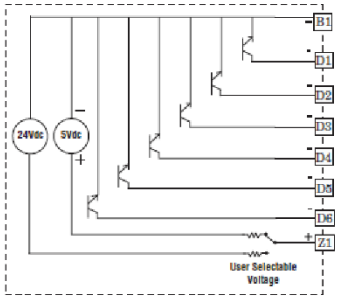

Dr. Jeffrey W. Hudgens, Hudgens@nist.gov, 240-314-6485
Dr. Jeffrey W. Hudgens, hudgens@nist.gov, 240-314-6485

Heater/Sensor Wiring Harness 1/2

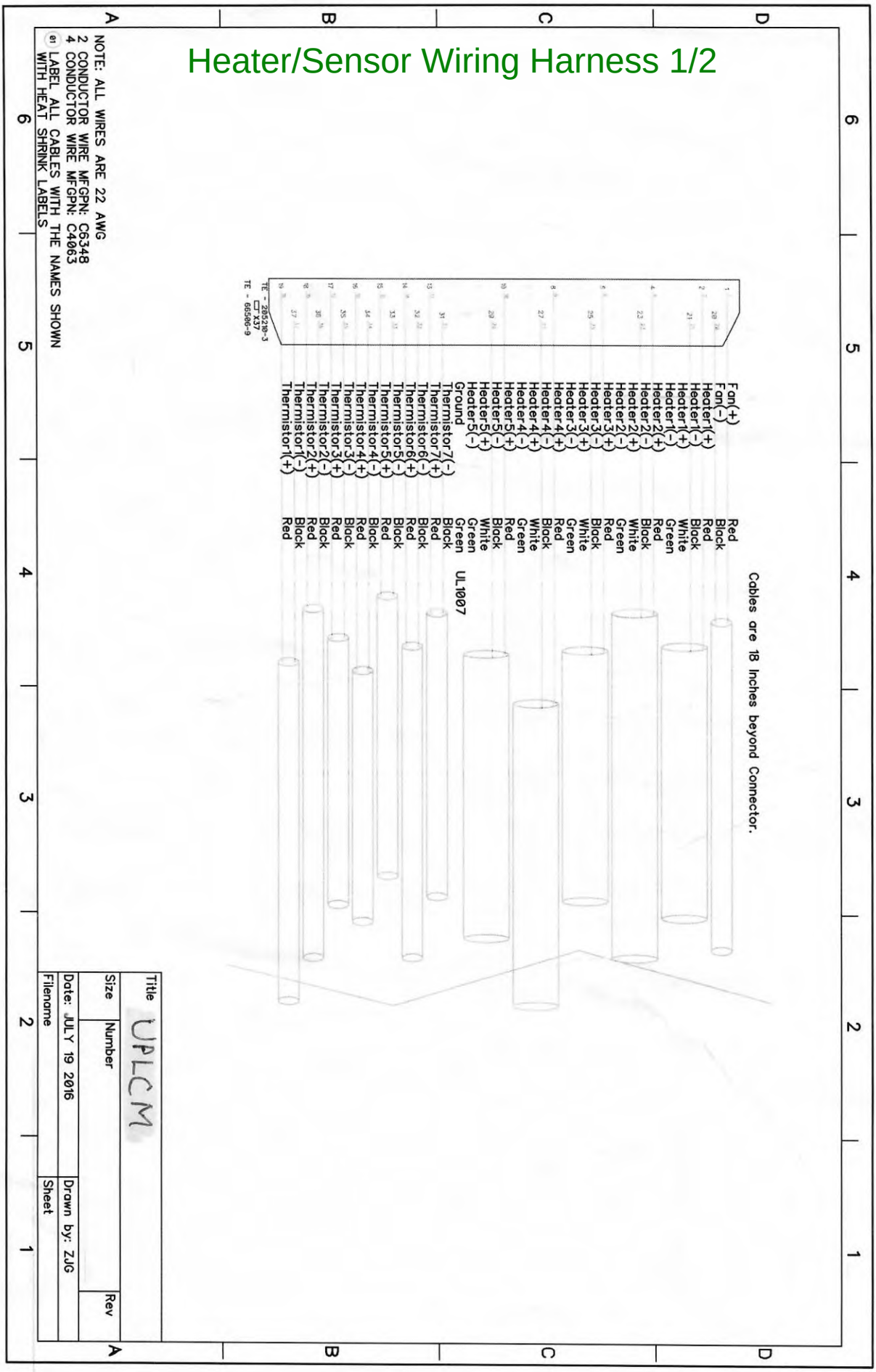

1 Inches=2.54 cm

Dr. Jeffrey W. Hudgens, Hudgens@nist.gov, 240-314-6485

Dr. Jeffrey W. Hudgens, hudgens@nist.gov, 240-314-6485

Heater/Sensor Wiring Harness 2/2

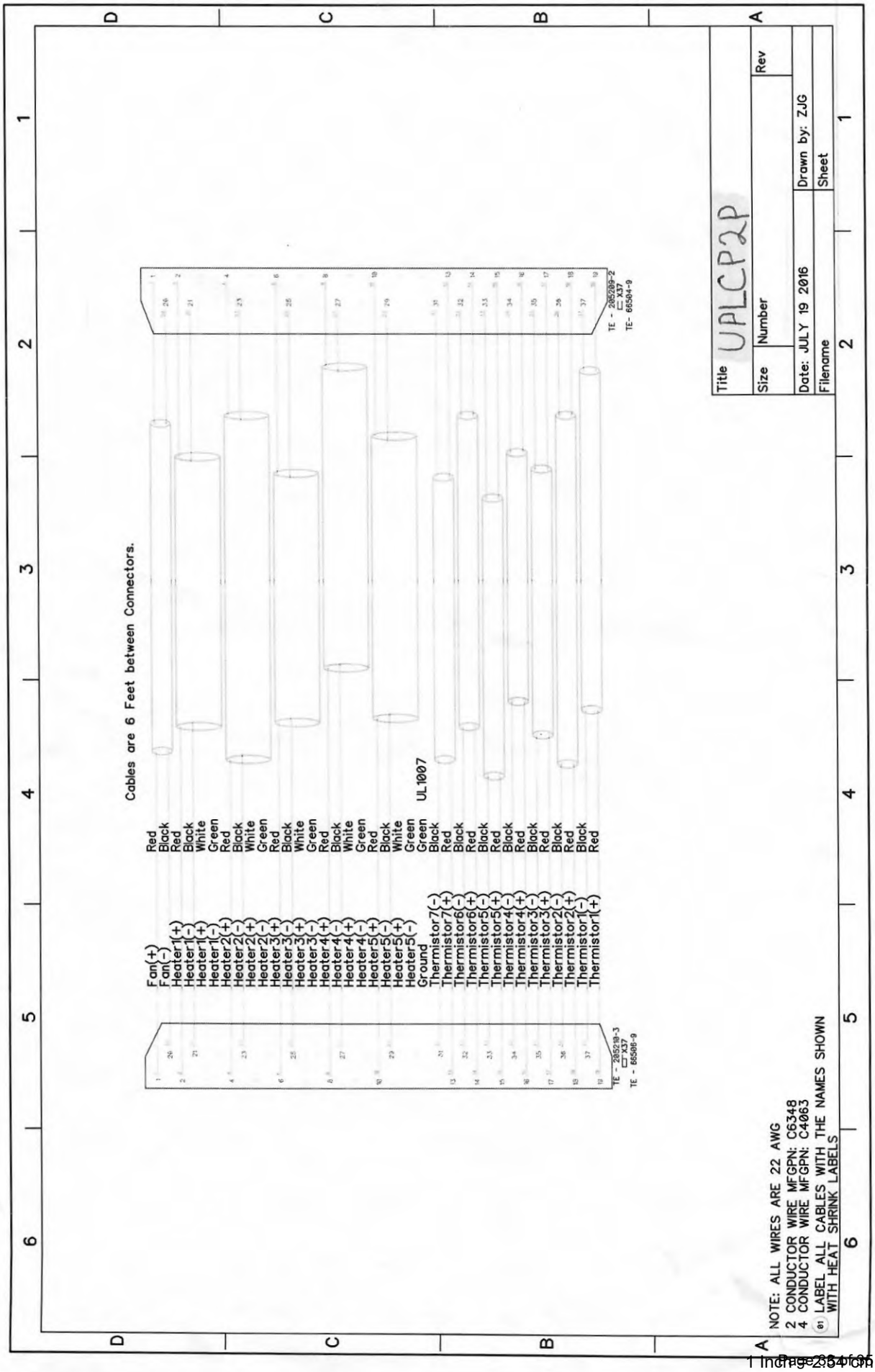

Dr. Jeffrey W. Hudgens, hudgens@nist.gov, 240-314-6485

Diagram for 8-pin Connector and Cable at T-control Chassis

-- Page 18 shows a view of this connector.

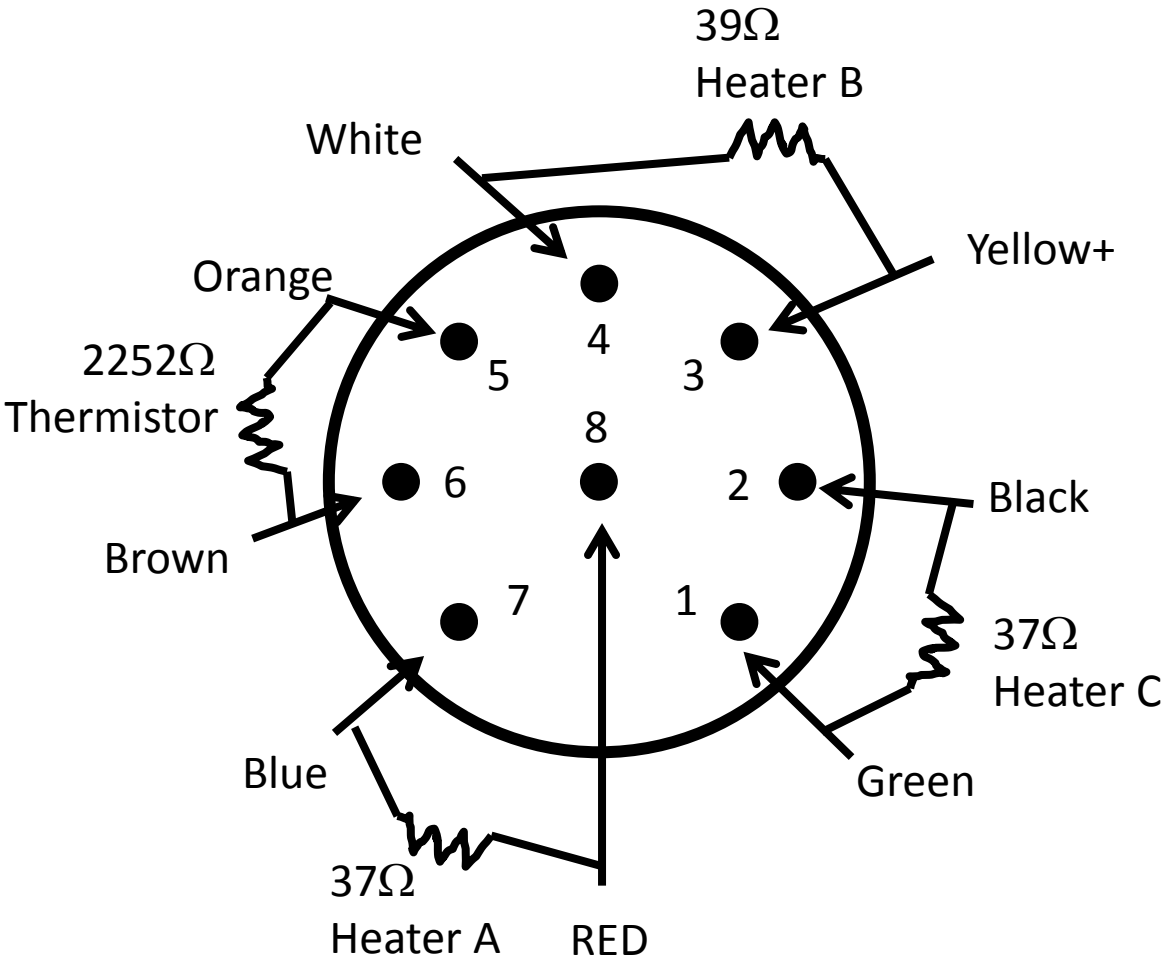

Inside chassis connect together into two leads:

Lead A: 1, 8, 4
Lead B: 2, 3, 7

Leads A & B connect to Channel 6 of the RACK8 board.

Dr. Jeffrey W. Hudgens, hudgens@nist.gov, 240-314-6485

Page 34 of 35

Configuration of Watlow F4T as Shown in COMPOSER Software

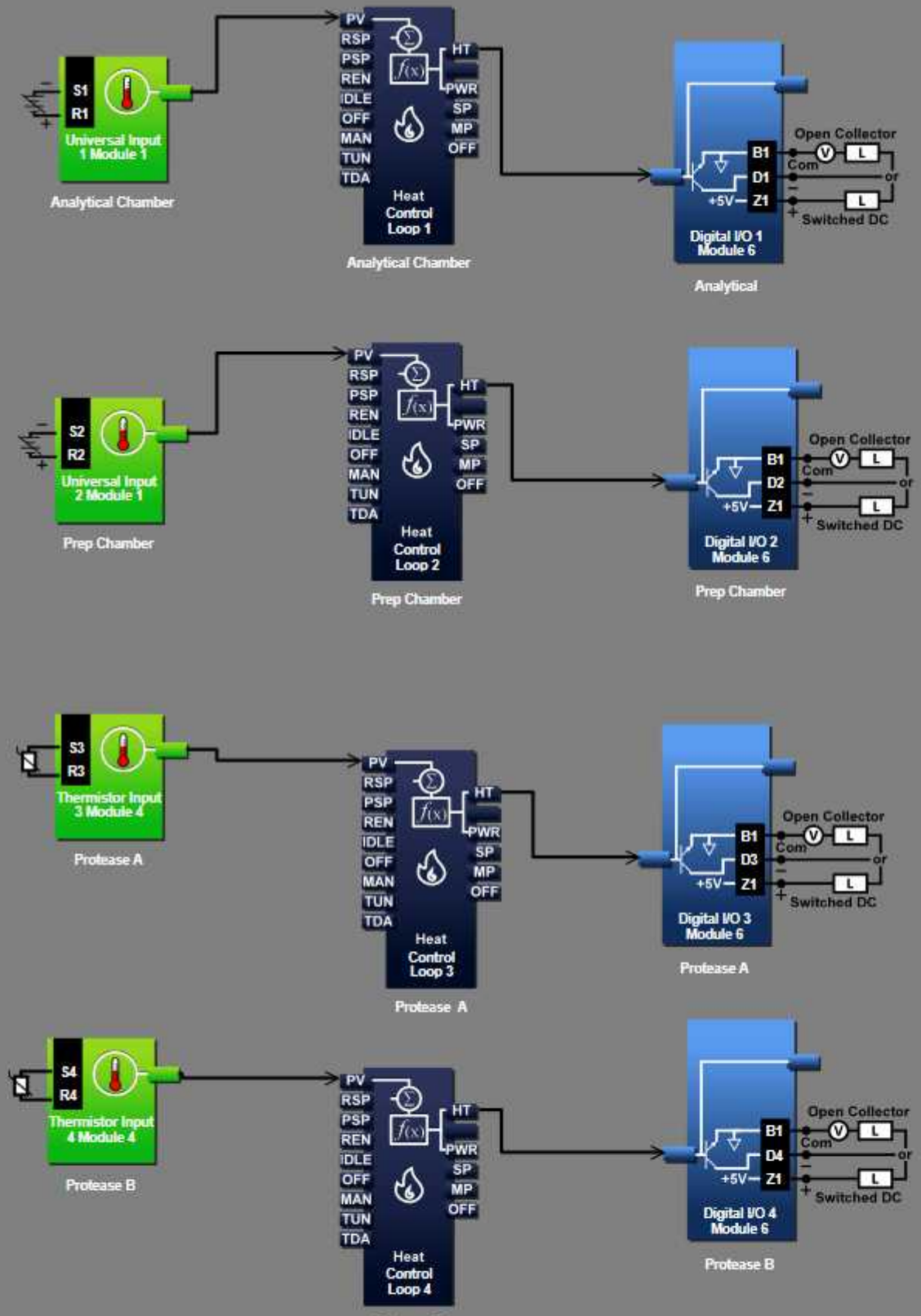

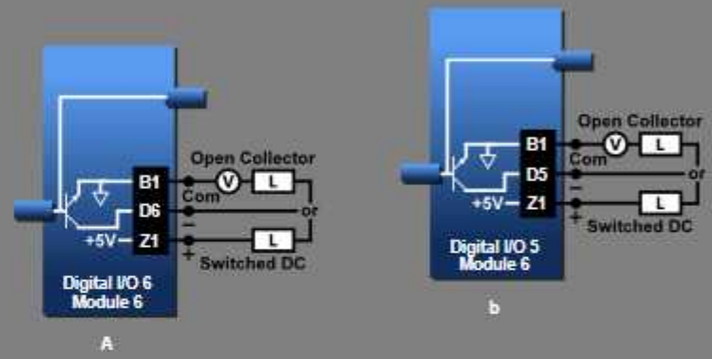

Dr. Jeffrey W. Hudgens, hudgens@nist.gov, 240-314-6485